FAN COIL UNIT

SINKO

Model SRC

- Ceiling Recessed Model

SRC

- Ceiling Recessed, High Static Model

TCRH

Model TCRH

- Ceiling Mount Exposed Model **TC**
- Floor Mount Exposed Model **TF**
- Floor Mount Recessed Model **TFR**

FOR 220V

FCU-20-A (220V)

SINKO Establishing the History of Air Conditioning

"Affluent Creativity" and "Unrivalled Quality":
Our Motto Making Us Forever and Air-Conditioning Industry Leader.

The dawn of the heating era in Japan began in 1875, when a technical college in Tokyo used a steam type heating radiator, while the first cooler was a well water air-cooling device developed by an Osaka company in 1907 - more than a century ago.
However, the real history of air-conditioning in Japan started in 1938 with the founding of Sinko Industries.
Over the 70 years that followed, we have paved a trail, side by side with advances in air-conditioning, as an industry pioneer.
Our corporate history is a telltale story of industrial air-conditioning development in our nation and our unique experiences and achievements in the field are powerful bases for the firm trust we receive as a top-class manufacturer.
Our history continues and we are determined to remain a leader for many years to come, exploiting our affluent creativity and unrivalled quality.

SINKO

Worldwide Installations

With SINKO's Air-Conditioning, the Entire Building Becomes a Comfortable World

Madinat Jumeirah（Dubai）

The Peninsula (Hong Kong)

Taj Mahal Hotel (Mumbai)

SINKO

TOKYO SKYTREE (Tokyo)

Crown Casino (Melbourne)

Marina Bay Sands (Singapore)

Gloval Network of SINKO

In addition to our Okayama and Kanagawa factories, the SINKO Group has production bases in China, Taiwan and Thailand, which enable us to effectively meet the needs of clients throughout Asia and the Middle East.

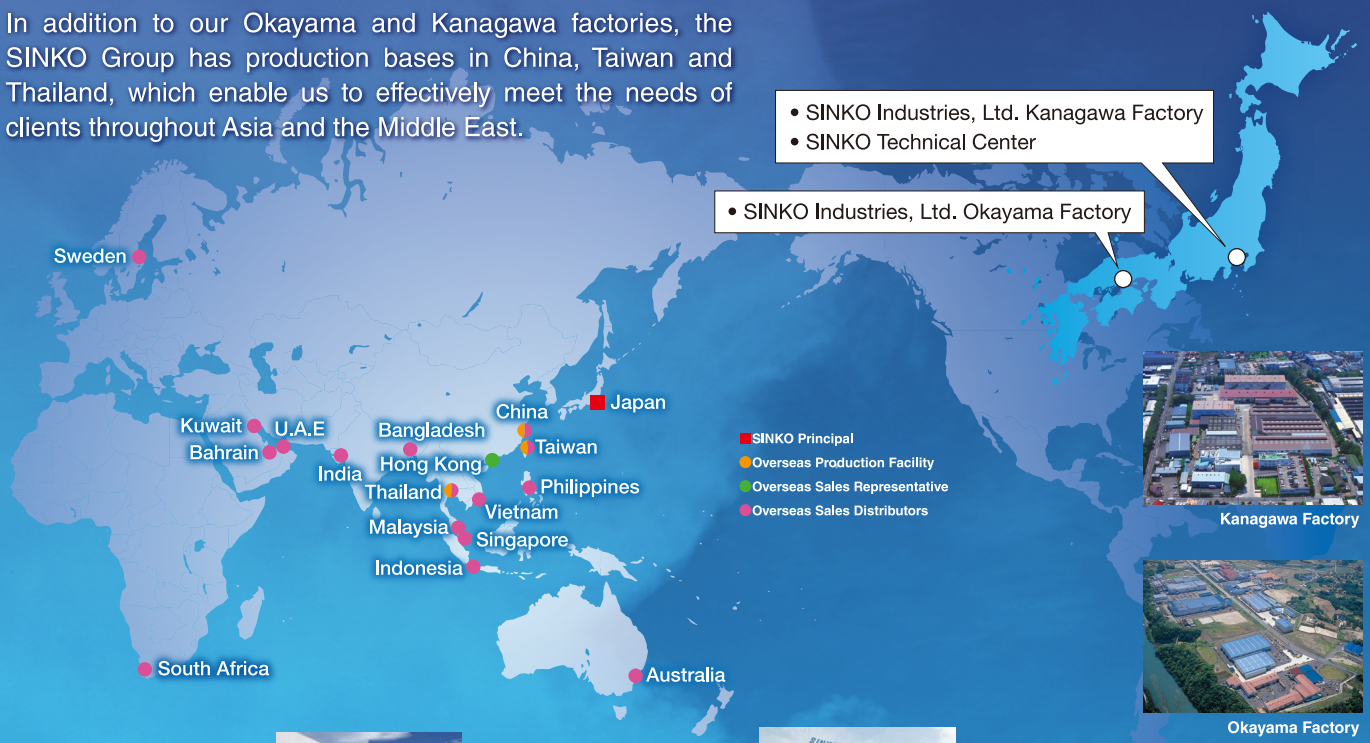

SINKO Air Conditioning (Thailand) Co., Ltd.

Taiwan SINKO Kogyo Co., Ltd.

Jakarta Showroom

Shanghai SINKO
Air Conditioning Equipment
Co.,Ltd.

SINKO has established production and sales bases throughout the world to efficiently meet customer needs.

SINKO has established production bases in both eastern and western Japan in order to shorten lead times and reduce CO_2 emissions. We have also improved productivity by introduced the latest CAD systems, 24-hour operation, automated panel molding and industrial robots. We acquired ISO 9001 and ISO 14001 quality/environmental management systems and will endeavor to further improve product quality and realize sustainable development.

SINKO Technical Center

The SINKO Technical Center oversees research and development for the SINKO Group as a whole, and in addition to an AMCA-certified blower performance testing system, the center also has the very latest equipment required for air conditioning R&D.

Production Facilities

SINKO has introduced the latest production robots that automatically measure the shape and position of holes, bend metal and carry out other processing. This has resulted in enhanced levels of safety, quality and productivity.

FAN COIL UNIT

Ceiling Recessed Model

SRC

Ceiling Recessed, High Static Model

TCRH

Ceiling Mount Exposed Model **TC**

Floor Mount Exposed Model **TF**

Floor Mount Recessed Model **TFR**

FOR 220V

Contents

Company Profile ..... 1~2

Worldwide Installations ..... 3~4

Company Outline 5

Index 6

SINKO FAN COIL UNIT LINE UP 7

Index 8
(Specification and Dimensions)

Nomenclature 9
SRC ..... 10~24
TCR-H ..... 25~31

Index
(Coil Performance/Derating Factors/Noise Level) 32

Coil Performance(Cooling/Heating) ..... 33~53
Derating Factors by ESP ..... 54~74
Noise Level ..... 75~79

Index
(Option,Referential Data) 80

Option 81
Wiring Diagram 82
Maintenance Time Table 83
Unit Construction 84
Installation Guide 85

Index
(Lineup Chart) 86

Lineup Chart ..... 87~110

FAN COIL UNIT 220V

(Specification and Dimensions)

Nomenclature 9

Ceiling Recessed Model

SRC

Standard Model
- 3 Row Cooling ..... SRC-2SW-3R-DRC(E)/DRC(E)15/DRC(E)24-Z/P/PW/PE/PC 10
- 4 Row Cooling ..... SRC-2SW-4R-DRC(E)/DRC(E)15/DRC(E)24-Z/P/PW/PE/PC 11
- DC Coil (2Row/1Row) ..... SRC-2SW-DC1-DRC(E)/DRC(E)15/DRC(E)24-Z/P/PW/PE/PC 12
- DC Coil (3Row/1Row) ..... SRC-2SW-DC2-DRC(E)/DRC(E)15/DRC(E)24-Z/P/PW/PE/PC 13
- High Temperature Rise ..... SRC-2SW-HT-DRC(E)/DRC(E)15/DRC(E)24-Z/P/PW/PE/PC 14

High Static Model
- 3 Row Cooling ..... SRC-2HW-3R-DRC(E)/DRC(E)15/DRC(E)24-Z/P/PW/PE/PC 15
- 4 Row Cooling ..... SRC-2HW-4R-DRC(E)/DRC(E)15/DRC(E)24-Z/P/PW/PE/PC 16
- DC Coil (2Row/1Row) ..... SRC-2HW-DC1-DRC(E)/DRC(E)15/DRC(E)24-Z/P/PW/PE/PC 17
- DC Coil (3Row/1Row) ..... SRC-2HW-DC2-DRC(E)/DRC(E)15/DRC(E)24-Z/P/PW/PE/PC 18
- High Temperature Rise ..... SRC-2HW-HT-DRC(E)/DRC(E)15/DRC(E)24-Z/P/PW/PE/PC 19

Large Air Volume Model
- 3 Row Cooling ..... SRC-2SH-3R-DRC(E)/DRC(E)15/DRC(E)24-Z/P/PW/PE/PC 20
- 4 Row Cooling ..... SRC-2SH-4R-DRC(E)/DRC(E)15/DRC(E)24-Z/P/PW/PE/PC 21
- DC Coil (2Row/1Row) ..... SRC-2SH-DC1-DRC(E)/DRC(E)15/DRC(E)24-Z/P/PW/PE/PC 22
- DC Coil (3Row/1Row) ..... SRC-2SH-DC2-DRC(E)/DRC(E)15/DRC(E)24-Z/P/PW/PE/PC 23
- High Temperature Rise ..... SRC-2SH-HT-DRC(E)/DRC(E)15/DRC(E)24-Z/P/PW/PE/PC 24

Ceiling Recessed, High Static Model

TCRH

High Static, Large Air Volume Model
- 4 Row Cooling ..... TCRH-600-2HW-4R-DRC(E)/DRC(E)15-Z/P/PW/PE/PC 25
- TCRH-[1000~2000]-2HW-4R-DRC(E)/DRC(E)15-Z/P/PW/PE/PC 26
- 6 Row Cooling ..... TCRH-2HW-6R-DRC(E)/DRC(E)15-Z/P/PW/PE/PC 27
- DC Coil (3Row/1Row) ..... TCRH-2HW-DC2-DRC(E)/DRC(E)15-Z/P/PW/PE/PC 28
- DC Coil (4Row/1Row) ..... TCRH-2HW-DC3-DRC(E)/DRC(E)15-Z/P/PW/PE/PC 29
- DC Coil (4Row/2Row) ..... TCRH-2HW-DC4-DRC(E)/DRC(E)15-Z/P/PW/PE/PC 30
- High Temperature Rise ..... TCRH-2HW-HT-DRC(E)/DRC(E)15-Z/P/PW/PE/PC 31

Nomenclature

Ceiling Recessed Model

SRC-300-2SW-3R-DRC-PW-Z

SIZE	POWER SOURCE	MOTOR	COIL	DRAIN PAN	PLENUM	FILTER
300	115V 1	Standard Model SW	3Row 3R	With PC ins DRC	Without Plenum Z	Without filter Z
400	220V 2	High Static Model HW	4Row 4R	With PC ins, 150mm extended DRC15	Plenum without ins P	Al filter A
600	230V 3	Large Air Volume Model SH	DC(2R/1R) DC1	With PC ins, 240mm extended DRC24	Plenum with GW PW	Saran net filter N
800	240V 4		DC(3R/1R) DC2	With PE ins DRE	Plenum with PE PE	Other filter S
1000	Special S		High Temp HT	With PE ins, 150mm extended DRE15	Plenum with PC PC	
1200				With PE ins, 240mm extended DRE24		
1400						

Ceiling Recessed, High Static Model

TCRH-600-2HW-3R-DRC-PW-Z

SIZE	POWER SOURCE	MOTOR	COIL	DRAIN PAN	PLENUM	FILTER
600	115V 1	High Static Model HW	4Row 4R	With PC ins DRC	Without Plenum Z	Without filter Z
1000	220V 2		6Row 6R	With PC ins, 150mm extended DRC15	Plenum without ins P	Al filter A
1200	230V 3		DC(3R/1R) DC2	With PE ins DRE	Plenum with GW PW	Saran net filter N
1600	240V 4		DC(4R/1R) DC3	With PE ins, 150mm extended DRE15	Plenum with PE PE	Other filter S
2000	Special S		DC(4R/2R) DC4		Plenum with PC PC	
			High Temp HT			

Ceiling Recessed Model-Standard Model
3-Row Cooling/Heating

SRC-2SW-3R-DRC -Z/P/PW/PC

SRC-2SW-3R-DRE -Z/P/PW/PE

220V

Specification

Unit Size		300	400	600	800	1000	1200	1400
Air Volume l/s	H	133	189	264	302	422	518	578
	M	114	154	216	251	349	425	495
	L	90	118	167	185	270	329	361
Cooling Capacity kW	SH	1.3	2.1	3.0	3.6	4.5	5.7	6.4
	TH	1.6	2.8	3.9	5.0	5.8	7.4	8.5
Heating Capacity kW		4.0	6.0	8.2	9.8	12.7	15.7	17.6
Water Flow l/s		0.08	0.14	0.19	0.25	0.28	0.36	0.41
W.P.D. kPa		2	7	14	28	6	11	16
Input Power W		50	66	97	121	162	190	237
Running Current A		0.23	0.30	0.44	0.55	0.73	0.87	1.08
Noise dB(A)	H	42.5	40.5	44.5	46.0	47.5	48.0	49.5
	M	39.5	36.0	41.0	41.5	44.0	43.5	46.0
	L	33.5	30.0	35.5	35.0	38.5	37.5	39.0
Weight kg (without plenum)		19	22	24	28	36	42	45
Weight kg (with plenum)		23	27	30	35	44	55	60
Holding Water Volume L		0.8	1.1	1.3	1.7	2.0	2.4	2.7
Casing		Galvanized Steel						
Fan		Galvanized sheet fabricated, Forward-Curved DIDW Fan						
Motor		3-Speed, PSC with Capacitor Cap and Flexible Conduit						
Power Source		AC220V, 50Hz, Single Phase						
Coil		Slit Surfaced, Aluminum Finned Coil complete with Female Sockets at Inlet/Outlet Conn. And Air Vent						
Operating Pressure		Max 1700kPa (250psig) unless otherwise specified						
Drain Pan		Stainless Steel, SUS430						

Note:
1. Cooling capacity is based on DB24°C, WB17.8°C, EWT7°C, LWT12°C.
2. Heating capacity is based on DB20°C, EWT60, same water flow as cooling.
3. Cooling/Heating Capacity, Input Power, Running Current are based on H speed.
4. Noise is measured at an anechoic chamber, 1m from the unit surface.
5. Running current may change according to the conditions.
6. Air volume is based on ESP 30Pa at H speed without plenum and filter.

9
10

Dimensions

Without Plenum SRC-2SW-3R-DRC-Z SRC-2SW-3R-DRE-Z SRC-2SW-3R-DRC15-Z SRC-2SW-3R-DRE15-Z SRC-2SW-3R-DRC24-Z SRC-2SW-3R-DRE24-Z

With Plenum SRC-2SW-3R-DRC-P/PW/PC SRC-2SW-3R-DRE-P/PW/PC SRC-2SW-3R-DRC15-P/PW/PC SRC-2SW-3R-DRE15-P/PW/PC SRC-2SW-3R-DRC24-P/PW/PC SRC-2SW-3R-DRE24-P/PW/PC

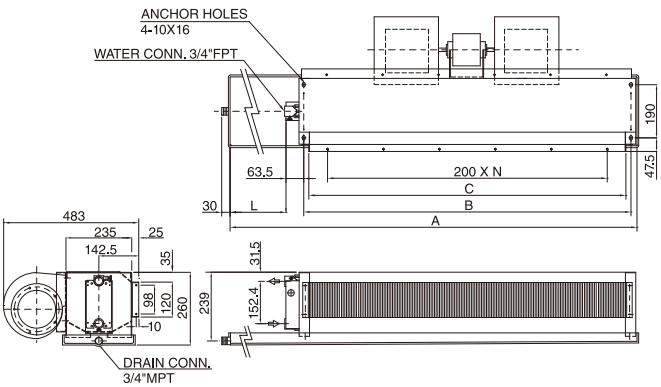

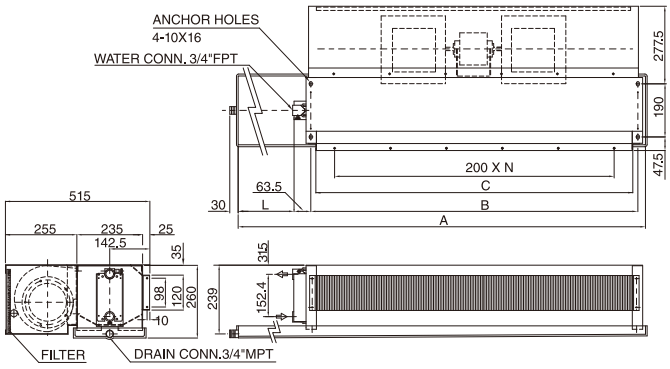

Unit Size	-Z/P/PW/PE/PC		15-Z/P/PW/PE/PC		24-Z/P/PW/PE/PC		B	C	N	NO. OF FAN	NO. OF MOTOR
	A	L	A	L	A	L					
SRC- 300-2SW-3R-DRC(E)	635	50	785	200	875	290	500	462	2	1	1
SRC- 400-2SW-3R-DRC(E)	885	50	1035	200	1125	290	750	712	3	2	1
SRC- 600-2SW-3R-DRC(E)	1020	50	1170	200	1260	290	885	847	4	2	1
SRC- 800-2SW-3R-DRC(E)	1305	50	1455	200	1545	290	1170	1132	5	2	1
SRC-1000-2SW-3R-DRC(E)	1490	50	1640	200	1730	290	1340	1302	6	3	2
SRC-1200-2SW-3R-DRC(E)	1740	50	1890	200	1980	290	1590	1552	7	4	2
SRC-1400-2SW-3R-DRC(E)	1920	50	2070	200	2160	290	1770	1732	8	4	2

Note:
1. Left hand unit is shown.
2. Furnish access door to service fan motor.
3. Wiring works between motor and switch, and unit to power source by contractors.
4. Unit shall be mounted horizontally.
5. To prevent condensation, fan interlock valve shall be furnished so that water supply will be stopped when fan is off.

Ceiling Recessed Model-Standard Model
4-Row Cooling/Heating

SRC-2SW-4R-DRC -Z/P/PW/PC
SRC-2SW-4R-DRE -Z/P/PW/PE

220V

Specification

Unit Size		300	400	600	800	1000	1200	1400
Air Volume l/s	H	124	172	245	285	394	508	544
	M	107	141	201	242	332	418	467
	L	84	108	155	177	257	320	345
Cooling Capacity kW	SH	1.4	2.2	3.1	3.8	4.8	6.2	6.8
	TH	1.8	2.9	4.3	5.5	6.3	8.5	9.4
Heating Capacity kW		4.3	6.2	8.7	10.5	13.6	17.5	19.0
Water Flow l/s		0.09	0.15	0.21	0.27	0.31	0.41	0.45
W.P.D. kPa		2	5	10	20	5	9	11
Input Power W		49	65	97	120	158	192	235
Running Current A		0.22	0.30	0.44	0.55	0.72	0.87	1.07
Noise dB(A)	H	45.0	42.5	46.5	46.5	49.5	47.5	51.0
	M	41.0	38.0	42.5	42.5	46.0	43.5	47.5
	L	36.0	32.0	37.5	35.5	41.0	37.5	40.5
Weight kg (without plenum)		15.1	19.8	21.8	26	34.6	39.9	42.5
Weight kg (with plenum)		17.7	23.2	26	31.3	40.5	46.2	50.5
Holding Water Volume L		1.0	1.5	1.8	2.3	2.7	3.2	3.5
Casing		Galvanized Steel						
Fan		Galvanized sheet fabricated, Forward-Curved DIDW Fan						
Motor		3-Speed, PSC with Capacitor Cap and Flexible Conduit						
Power Source		AC220V, 50Hz, Single Phase						
Coil		Slit Surfaced, Aluminum Finned Coil complete with Female Sockets at Inlet/Outlet Conn. And Air Vent						
Operating Pressure		Max 1700kPa (250psig) unless otherwise specified						
Drain Pan		Stainless Steel, SUS430						

Note:
1. Cooling capacity is based on DB24°C, WB17.8°C, EWT7°C, LWT12°C.
2. Heating capacity is based on DB20°C, EWT60, same water flow as cooling.
3. Cooling/Heating Capacity, Input Power, Running Current are based on H speed.
4. Noise is measured at an anechoic chamber, 1m from the unit surface.
5. Running current may change according to the conditions.
6. Air volume is based on ESP 30Pa at H speed without plenum and filter.

Dimensions

Without Plenum SRC-2SW-4R-DRC-Z, SRC-2SW-4R-DRE-Z, SRC-2SW-4R-DRC15-Z, SRC-2SW-4R-DRE15-Z, SRC-2SW-4R-DRC24-Z, SRC-2SW-4R-DRE24-Z

With Plenum SRC-2SW-4R-DRC-P/PW/PC, SRC-2SW-4R-DRE-P/PW/PC, SRC-2SW-4R-DRC15-P/PW/PC, SRC-2SW-4R-DRE15-P/PW/PC, SRC-2SW-4R-DRC24-P/PW/PC, SRC-2SW-4R-DRE24-P/PW/PC

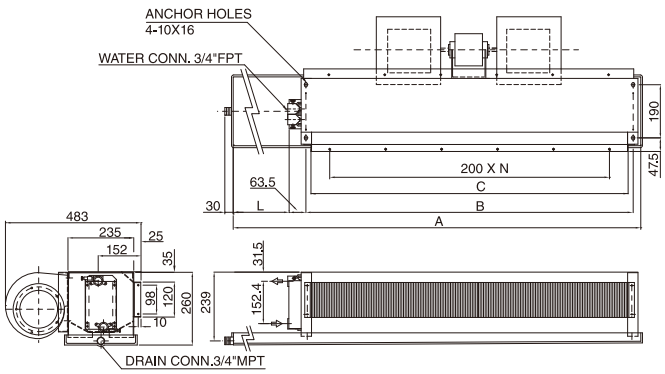

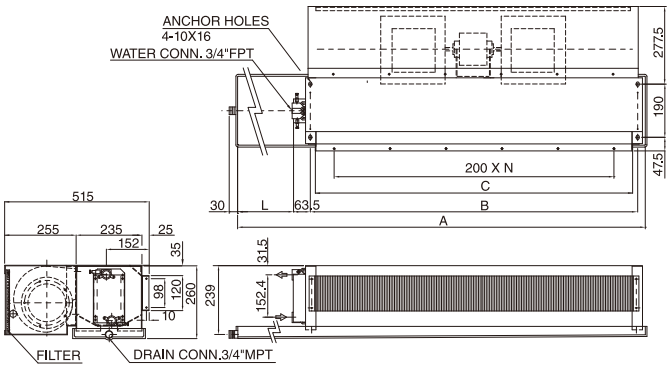

Unit Size	-Z/P/PW/PE/PC		15-Z/P/PW/PE/PC		24-Z/P/PW/PE/PC		B	C	N	NO. OF FAN	NO. OF MOTOR
	A	L	A	L	A	L					
SRC- 300-2SW-4R-DRC(E)	635	50	785	200	875	290	500	462	2	1	1
SRC- 400-2SW-4R-DRC(E)	885	50	1035	200	1125	290	750	712	3	2	1
SRC- 600-2SW-4R-DRC(E)	1020	50	1170	200	1260	290	885	847	4	2	1
SRC- 800-2SW-4R-DRC(E)	1305	50	1455	200	1545	290	1170	1132	5	2	1
SRC-1000-2SW-4R-DRC(E)	1490	50	1640	200	1730	290	1340	1302	6	3	2
SRC-1200-2SW-4R-DRC(E)	1740	50	1890	200	1980	290	1590	1552	7	4	2
SRC-1400-2SW-4R-DRC(E)	1920	50	2070	200	2160	290	1770	1732	8	4	2

Note:
1. Left hand unit is shown.
2. Furnish access door to service fan motor.
3. Wiring works between motor and switch, and unit to power source by contractors.
4. Unit shall be mounted horizontally.
5. To prevent condensation, fan interlock valve shall be furnished so that water supply will be stopped when fan is off.

Ceiling Recessed Model-Standard Model
2-Row Cooling,1-Row Heating

SRC-2SW-DC1-DRC -Z/P/PW/PC

SRC-2SW-DC1-DRE -Z/P/PW/PE

220V

Specification

Unit Size		300	400	600	800	1000	1200	1400
Air Volume l/s	H	133	189	264	302	422	518	578
	M	114	154	216	251	349	425	495
	L	90	118	167	185	270	329	361
Cooling Capacity kW	SH	1.1	1.8	2.4	3.0	3.7	4.7	5.3
	TH	1.3	2.2	3.1	3.9	4.5	5.7	6.6
Heating Capacity kW		3.3	4.9	6.6	8.1	10.4	12.9	14.4
Water Flow l/s		0.07	0.11	0.15	0.19	0.22	0.28	0.32
W.P.D. kPa		3	9	18	36	8	14	20
Input Power W		50	66	97	121	162	190	237
Running Current A		0.23	0.30	0.44	0.55	0.73	0.87	1.08
Noise dB(A)	H	42.5	40.5	44.5	46.0	47.5	48.0	49.5
	M	39.5	36.0	41.0	41.5	44.0	43.5	46.0
	L	33.5	30.0	35.5	35.0	38.5	37.5	39.0
Weight kg (without plenum)		19	22	24	28	36	42	45
Weight kg (with plenum)		23	27	30	35	44	55	60
Holding Water Volume L		0.8	1.1	1.3	1.7	2.0	2.4	2.7
Casing		Galvanized Steel						
Fan		Galvanized sheet fabricated, Forward-Curved DIDW Fan						
Motor		3-Speed, PSC with Capacitor Cap and Flexible Conduit						
Power Source		AC220V, 50Hz, Single Phase						
Coil		Slit Surfaced, Aluminum Finned Coil complete with Female Sockets at Inlet/Outlet Conn. And Air Vent						
Operating Pressure		Max 1700kPa (250psig) unless otherwise specified						
Drain Pan		Stainless Steel, SUS430						

Note:
1. Cooling capacity is based on DB24°C, WB17.8°C, EWT7°C, LWT12°C.
2. Heating capacity is based on DB20°C, EWT60, same water flow as cooling.
3. Cooling/Heating Capacity, Input Power, Running Current are based on H speed.
4. Noise is measured at an anechoic chamber, 1m from the unit surface.
5. Running current may change according to the conditions.
6. Air volume is based on ESP 30Pa at H speed without plenum and filter.

11
12

Dimensions

Without Plenum SRC-2SW-DC1-DRC-Z SRC-2SW-DC1-DRE-Z SRC-2SW-DC1-DRC15-Z SRC-2SW-DC1-DRE15-Z SRC-2SW-DC1-DRC24-Z SRC-2SW-DC1-DRE24-Z

With Plenum SRC-2SW-DC1-DRC-P/PW/PC SRC-2SW-DC1-DRE-P/PW/PC SRC-2SW-DC1-DRC15-P/PW/PC SRC-2SW-DC1-DRE15-P/PW/PC SRC-2SW-DC1-DRC24-P/PW/PC SRC-2SW-DC1-DRE24-P/PW/PC

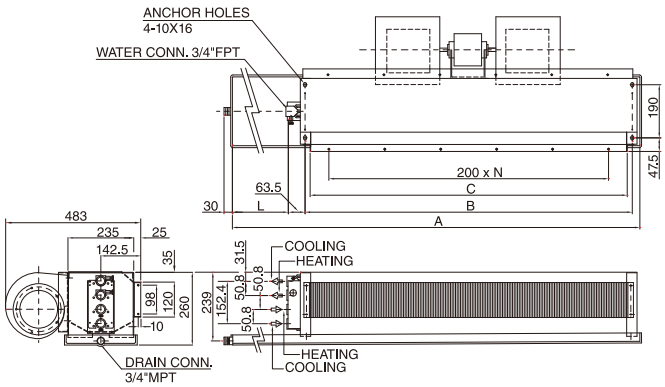

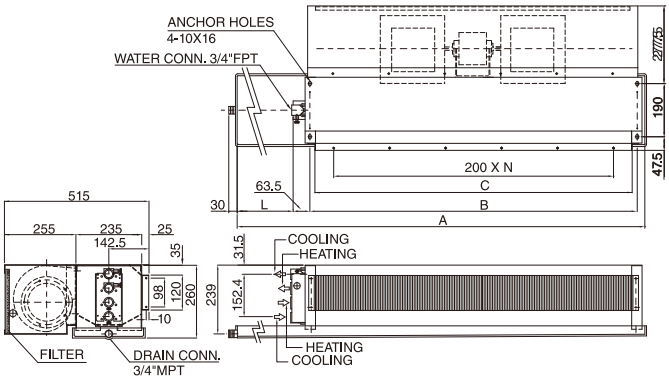

Unit Size	-Z/P/PW/PE/PC		15-Z/P/PW/PE/PC		24-Z/P/PW/PE/PC		B	C	N	NO. OF FAN	NO. OF MOTOR
	A	L	A	L	A	L					
SRC- 300-2SW-DC1-DRC(E)	635	50	785	200	875	290	500	462	2	1	1
SRC- 400-2SW-DC1-DRC(E)	885	50	1035	200	1125	290	750	712	3	2	1
SRC- 600-2SW-DC1-DRC(E)	1020	50	1170	200	1260	290	885	847	4	2	1
SRC- 800-2SW-DC1-DRC(E)	1305	50	1455	200	1545	290	1170	1132	5	2	1
SRC-1000-2SW-DC1-DRC(E)	1490	50	1640	200	1730	290	1340	1302	6	3	2
SRC-1200-2SW-DC1-DRC(E)	1740	50	1890	200	1980	290	1590	1552	7	4	2
SRC-1400-2SW-DC1-DRC(E)	1920	50	2070	200	2160	290	1770	1732	8	4	2

Note:
1. Left hand unit is shown.
2. Furnish access door to service fan motor.
3. Wiring works between motor and switch, and unit to power source by contractors.
4. Unit shall be mounted horizontally.
5. To prevent condensation, fan interlock valve shall be furnished so that water supply will be stopped when fan is off.

Ceiling Recessed Model-Standard Model
3-Row Cooling, 1-Row Heating

SRC-2SW-DC2-DRC -Z/P/PW/PC

SRC-2SW-DC2-DRE -Z/P/PW/PE

220V

Specification

Unit Size		300	400	600	800	1000	1200	1400
Air Volume l/s	H	124	172	245	285	394	508	544
	M	107	141	201	242	332	418	467
	L	84	108	155	177	257	320	345
Cooling Capacity kW	SH	1.3	2.0	2.8	3.5	4.3	5.6	6.2
	TH	1.5	2.6	3.8	4.8	5.5	7.3	8.2
Heating Capacity kW		3.9	5.7	7.9	9.5	12.4	15.9	17.3
Water Flow l/s		0.08	0.13	0.18	0.24	0.27	0.36	0.4
W.P.D. kPa		2	6	13	26	6	11	15
Input Power W		49	65	97	120	158	192	235
Running Current A		0.22	0.30	0.44	0.55	0.72	0.87	1.07
Noise dB(A)	H	45.0	42.5	46.5	46.5	49.5	47.5	51.0
	M	41.0	38.0	42.5	42.5	46.0	43.5	47.5
	L	36.0	32.0	37.5	35.5	41.0	37.5	40.5
Weight kg (without plenum)		15.1	19.8	21.8	26	34.6	39.9	42.5
Weight kg (with plenum)		17.7	23.2	26	31.3	40.5	46.2	50.5
Holding Water Volume L		1.0	1.5	1.8	2.3	2.7	3.2	3.5
Casing		Galvanized Steel						
Fan		Galvanized sheet fabricated, Forward-Curved DIDW Fan						
Motor		3-Speed, PSC with Capacitor Cap and Flexible Conduit						
Power Source		AC220V, 50Hz, Single Phase						
Coil		Slit Surfaced, Aluminum Finned Coil complete with Female Sockets at Inlet/Outlet Conn. And Air Vent						
Operating Pressure		Max 1700kPa (250psig) unless otherwise specified						
Drain Pan		Stainless Steel, SUS430						

Note:
1. Cooling capacity is based on DB24°C, WB17.8°C, EWT7°C, LWT12°C.
2. Heating capacity is based on DB20°C, EWT60, same water flow as cooling.
3. Cooling/Heating Capacity, Input Power, Running Current are based on H speed.
4. Noise is measured at an anechoic chamber, 1m from the unit surface.
5. Running current may change according to the conditions.
6. Air volume is based on ESP 30Pa at H speed without plenum and filter.

Dimensions

Without Plenum SRC-2SW-DC2-DRC-Z SRC-2SW-DC2-DRE-Z SRC-2SW-DC2-DRC15-Z SRC-2SW-DC2-DRE15-Z SRC-2SW-DC2-DRC24-Z SRC-2SW-DC2-DRE24-Z

With Plenum SRC-2SW-DC2-DRC-P/PW/PC SRC-2SW-DC2-DRE-P/PW/PC SRC-2SW-DC2-DRC15-P/PW/PC SRC-2SW-DC2-DRE15-P/PW/PC SRC-2SW-DC2-DRC24-P/PW/PC SRC-2SW-DC2-DRE24-P/PW/PC

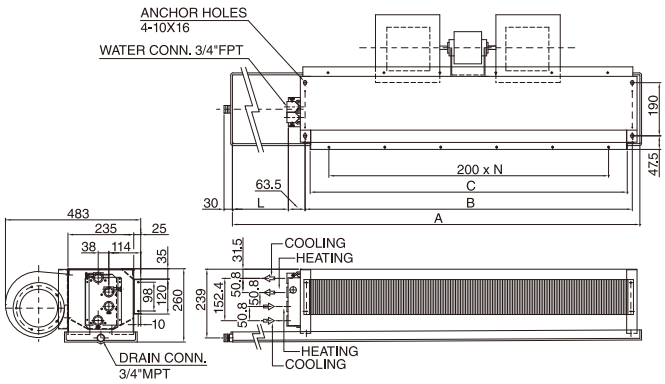

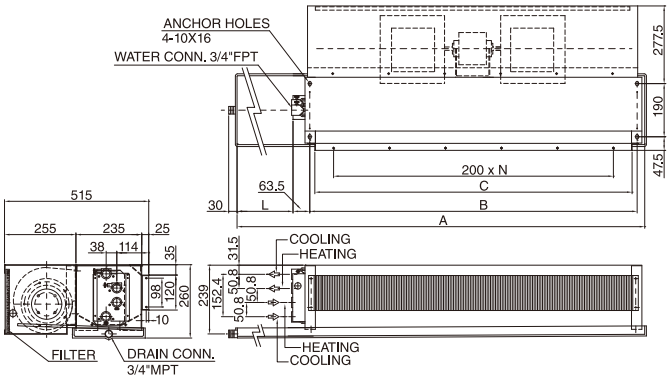

Unit Size	-Z/P/PW/PE/PC		15-Z/P/PW/PE/PC		24-Z/P/PW/PE/PC		B	C	N	NO. OF FAN	NO. OF MOTOR
	A	L	A	L	A	L					
SRC- 300-2SW-DC2-DRC(E)	635	50	785	200	875	290	500	462	2	1	1
SRC- 400-2SW-DC2-DRC(E)	885	50	1035	200	1125	290	750	712	3	2	1
SRC- 600-2SW-DC2-DRC(E)	1020	50	1170	200	1260	290	885	847	4	2	1
SRC- 800-2SW-DC2-DRC(E)	1305	50	1455	200	1545	290	1170	1132	5	2	1
SRC-1000-2SW-DC2-DRC(E)	1490	50	1640	200	1730	290	1340	1302	6	3	2
SRC-1200-2SW-DC2-DRC(E)	1740	50	1890	200	1980	290	1590	1552	7	4	2
SRC-1400-2SW-DC2-DRC(E)	1920	50	2070	200	2160	290	1770	1732	8	4	2

Note:
1. Left hand unit is shown.
2. Furnish access door to service fan motor.
3. Wiring works between motor and switch, and unit to power source by contractors.
4. Unit shall be mounted horizontally.
5. To prevent condensation, fan interlock valve shall be furnished so that water supply will be stopped when fan is off.

Ceiling Recessed Model-Standard Model
4-Row, High Temperature Rise

SRC-2SW-HT-DRC -Z/P/PW/PC

SRC-2SW-HT-DRE -Z/P/PW/PE

220V

Specification

Unit Size		300	400	600	800	1000	1200	1400
Air Volume l/s	H	124	172	245	285	394	508	544
	M	107	141	201	242	332	418	467
	L	84	108	155	177	257	320	345
Cooling Capacity kW	SH	1.4	2.1	3.0	3.6	4.6	6.0	6.5
	TH	1.9	3.0	4.3	5.4	6.4	8.5	9.3
Heating Capacity kW		4.1	5.9	8.3	10.0	13.0	16.7	18.1
Water Flow l/s		0.07	0.11	0.15	0.19	0.22	0.29	0.32
W.P.D. kPa		6	17	36	70	16	31	40
Input Power W		49	65	97	120	158	192	235
Running Current A		0.22	0.30	0.44	0.55	0.72	0.87	1.07
Noise dB(A)	H	45.0	42.5	46.5	46.5	49.5	47.5	51.0
	M	41.0	38.0	42.5	42.5	46.0	43.5	47.5
	L	36.0	32.0	37.5	35.5	41.0	37.5	40.5
Weight kg (without plenum)		15.1	19.8	21.8	26	34.6	39.9	42.5
Weight kg (with plenum)		17.7	23.2	26	31.3	40.5	46.2	50.5
Holding Water Volume L		1.0	1.5	1.8	2.3	2.7	3.2	3.5
Casing		Galvanized Steel						
Fan		Galvanized sheet fabricated, Forward-Curved DIDW Fan						
Motor		3-Speed, PSC with Capacitor Cap and Flexible Conduit						
Power Source		AC220V, 50Hz, Single Phase						
Coil		Slit Surfaced, Aluminum Finned Coil complete with Female Sockets at Inlet/Outlet Conn. And Air Vent						
Operating Pressure		Max 1700kPa (250psig) unless otherwise specified						
Drain Pan		Stainless Steel, SUS430						

Note:
1. Cooling capacity is based on DB24°C, WB17.8°C, EWT7°C, LWT14°C.
2. Heating capacity is based on DB20°C, EWT60, same water flow as cooling.
3. Cooling/Heating Capacity, Input Power, Running Current are based on H speed.
4. Noise is measured at an anechoic chamber, 1m from the unit surface.
5. Running current may change according to the conditions.
6. Air volume is based on ESP 30Pa at H speed without plenum and filter.

◀ 13
14

Dimensions

Without Plenum SRC-2SW-HT-DRC-Z SRC-2SW-HT-DRE-Z SRC-2SW-HT-DRC15-Z SRC-2SW-HT-DRE15-Z SRC-2SW-HT-DRC24-Z SRC-2SW-HT-DRE24-Z

With Plenum SRC-2SW-HT-DRC-P/PW/PC SRC-2SW-HT-DRE-P/PW/PC SRC-2SW-HT-DRC15-P/PW/PC SRC-2SW-HT-DRE15-P/PW/PC SRC-2SW-HT-DRC24-P/PW/PC SRC-2SW-HT-DRE24-P/PW/PC

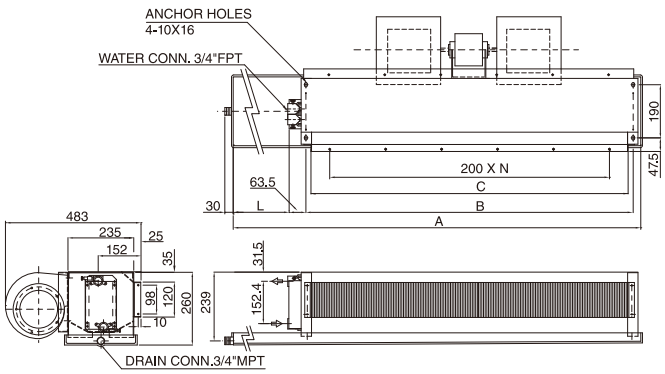

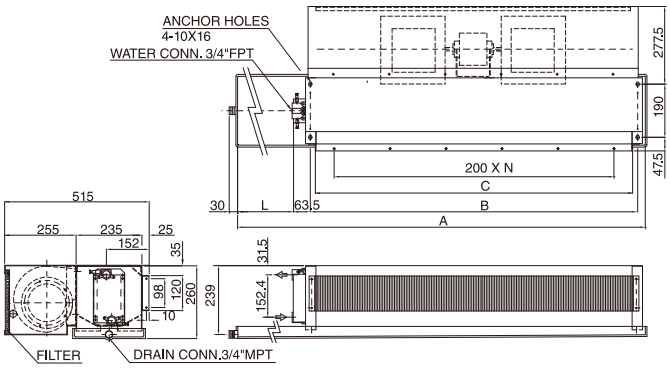

Unit Size	-Z/P/PW/PE/PC		15-Z/P/PW/PE/PC		24-Z/P/PW/PE/PC		B	C	N	NO. OF FAN	NO. OF MOTOR
	A	L	A	L	A	L					
SRC- 300-2SW-HT-DRC(E)	635	50	785	200	875	290	500	462	2	1	1
SRC- 400-2SW-HT-DRC(E)	885	50	1035	200	1125	290	750	712	3	2	1
SRC- 600-2SW-HT-DRC(E)	1020	50	1170	200	1260	290	885	847	4	2	1
SRC- 800-2SW-HT-DRC(E)	1305	50	1455	200	1545	290	1170	1132	5	2	1
SRC-1000-2SW-HT-DRC(E)	1490	50	1640	200	1730	290	1340	1302	6	3	2
SRC-1200-2SW-HT-DRC(E)	1740	50	1890	200	1980	290	1590	1552	7	4	2
SRC-1400-2SW-HT-DRC(E)	1920	50	2070	200	2160	290	1770	1732	8	4	2

Note:
1. Left hand unit is shown.
2. Furnish access door to service fan motor.
3. Wiring works between motor and switch, and unit to power source by contractors.
4. Unit shall be mounted horizontally.
5. To prevent condensation, fan interlock valve shall be furnished so that water supply will be stopped when fan is off.

Ceiling Recessed Model-High Static Model
3-Row Cooling/Heating

SRC-2HW-3R-DRC -Z/P/PW/PC
SRC-2HW-3R-DRE -Z/P/PW/PE

220V

Specification

Unit Size		300	400	600	800	1000	1200	1400
Air Volume l/s	H	154	226	283	340	460	552	655
	M	135	183	259	285	410	506	570
	L	104	144	213	210	336	418	432
Cooling Capacity kW	SH	1.5	2.5	3.1	4.0	4.8	5.9	7.0
	TH	1.8	3.2	4.1	5.5	6.1	7.7	9.3
Heating Capacity kW		4.5	6.9	8.6	10.7	13.5	16.4	19.3
Water Flow l/s		0.09	0.16	0.2	0.27	0.3	0.37	0.45
W.P.D. kPa		3	9	15	32	7	12	18
Input Power W		68	94	119	155	204	234	283
Running Current A		0.31	0.43	0.55	0.71	0.94	1.07	1.30
Noise dB(A)	H	48.5	46.5	48.5	50.5	52.0	51.0	54.5
	M	45.0	41.0	46.5	46.5	49.0	49.0	51.0
	L	38.5	35.5	42.5	39.5	44.5	44.5	44.0
Weight kg (without plenum)		19	22	24	28	36	42	45
Weight kg (with plenum)		23	27	30	35	44	55	60
Holding Water Volume L		0.8	1.1	1.3	1.7	2.0	2.4	2.7
Casing		Galvanized Steel						
Fan		Galvanized sheet fabricated, Forward-Curved DIDW Fan						
Motor		3-Speed, PSC with Capacitor Cap and Flexible Conduit						
Power Source		AC220V, 50Hz, Single Phase						
Coil		Slit Surfaced, Aluminum Finned Coil complete with Female Sockets at Inlet/Outlet Conn. And Air Vent						
Operating Pressure		Max 1700kPa (250psig) unless otherwise specified						
Drain Pan		Stainless Steel, SUS430						

Note:
1. Cooling capacity is based on DB24°C, WB17.8°C, EWT7°C, LWT12°C.
2. Heating capacity is based on DB20°C, EWT60, same water flow as cooling.
3. Cooling/Heating Capacity, Input Power, Running Current are based on H speed.
4. Noise is measured at an anechoic chamber, 1m from the unit surface.
5. Running current may change according to the conditions.
6. Air volume is based on ESP 50Pa at H speed without plenum and filter.

Dimensions

Without Plenum SRC-2HW-3R-DRC-Z SRC-2HW-3R-DRE-Z SRC-2HW-3R-DRC15-Z SRC-2HW-3R-DRE15-Z SRC-2HW-3R-DRC24-Z SRC-2HW-3R-DRE24-Z

With Plenum SRC-2HW-3R-DRC-P/PW/PC SRC-2HW-3R-DRE-P/PW/PC SRC-2HW-3R-DRC15-P/PW/PC SRC-2HW-3R-DRE15-P/PW/PC SRC-2HW-3R-DRC24-P/PW/PC SRC-2HW-3R-DRE24-P/PW/PC

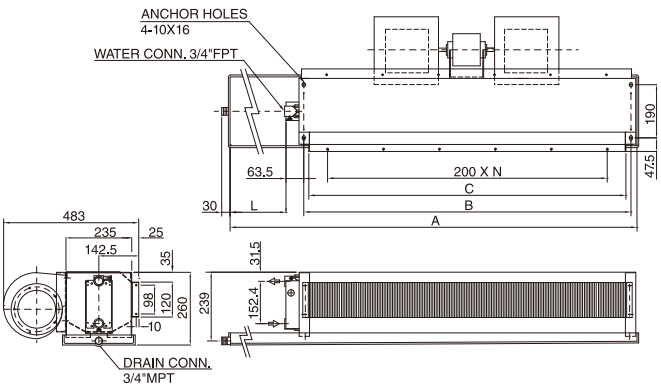

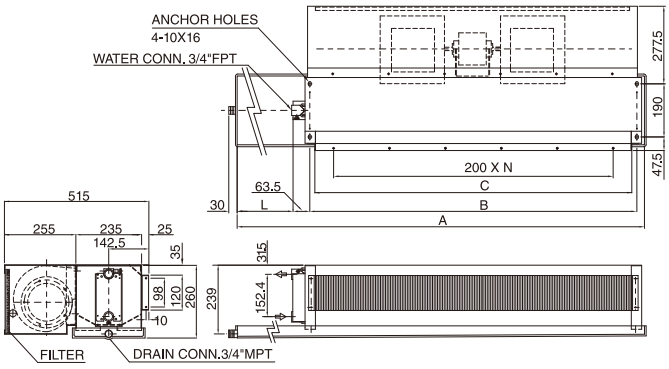

Unit Size	-Z/P/PW/PE/PC		15-Z/P/PW/PE/PC		24-Z/P/PW/PE/PC		B	C	N	NO. OF FAN	NO. OF MOTOR
	A	L	A	L	A	L					
SRC- 300-2HW-3R-DRC(E)	635	50	785	200	875	290	500	462	2	1	1
SRC- 400-2HW-3R-DRC(E)	885	50	1035	200	1125	290	750	712	3	2	1
SRC- 600-2HW-3R-DRC(E)	1020	50	1170	200	1260	290	885	847	4	2	1
SRC- 800-2HW-3R-DRC(E)	1305	50	1455	200	1545	290	1170	1132	5	2	1
SRC-1000-2HW-3R-DRC(E)	1490	50	1640	200	1730	290	1340	1302	6	3	2
SRC-1200-2HW-3R-DRC(E)	1740	50	1890	200	1980	290	1590	1552	7	4	2
SRC-1400-2HW-3R-DRC(E)	1920	50	2070	200	2160	290	1770	1732	8	4	2

Note:
1. Left hand unit is shown.
2. Furnish access door to service fan motor.
3. Wiring works between motor and switch, and unit to power source by contractors.
4. Unit shall be mounted horizontally.
5. To prevent condensation, fan interlock valve shall be furnished so that water supply will be stopped when fan is off.

Ceiling Recessed Model-High Static Model
4-Row Cooling/Heating

SRC-2HW-4R-DRC -Z/P/PW/PC
SRC-2HW-4R-DRE -Z/P/PW/PE

220V

Specification

Unit Size		300	400	600	800	1000	1200	1400
Air Volume l/s	H	142	206	259	333	422	537	609
	M	127	166	237	283	384	493	533
	L	99	132	197	213	318	409	412
Cooling Capacity kW	SH	1.5	2.5	3.2	4.3	5.0	6.5	7.4
	TH	2.0	3.4	4.5	6.2	6.7	8.8	10.2
Heating Capacity kW		4.8	7.2	9.1	11.9	14.4	18.3	20.8
Water Flow l/s		0.1	0.17	0.22	0.3	0.32	0.42	0.49
W.P.D. kPa		2	6	11	24	5	9	13
Input Power W		65	91	115	148	190	231	275
Running Current A		0.30	0.42	0.53	0.68	0.86	1.06	1.26
Noise dB(A)	H	50.0	48.0	50.0	51.0	53.0	51.5	55.0
	M	45.5	44.5	48.5	47.0	50.5	50.0	52.0
	L	40.5	37.5	44.5	40.5	46.5	45.0	46.0
Weight kg (without plenum)		15.1	19.8	21.8	26	34.6	39.9	42.5
Weight kg (with plenum)		17.7	23.2	26	31.3	40.5	46.2	50.5
Holding Water Volume L		1.0	1.5	1.8	2.3	2.7	3.2	3.5
Casing		Galvanized Steel						
Fan		Galvanized sheet fabricated, Forward-Curved DIDW Fan						
Motor		3-Speed, PSC with Capacitor Cap and Flexible Conduit						
Power Source		AC220V, 50Hz, Single Phase						
Coil		Slit Surfaced, Aluminum Finned Coil complete with Female Sockets at Inlet/Outlet Conn. And Air Vent						
Operating Pressure		Max 1700kPa (250psig) unless otherwise specified						
Drain Pan		Stainless Steel, SUS430						

Note:
1. Cooling capacity is based on DB24°C, WB17.8°C, EWT7°C, LWT12°C.
2. Heating capacity is based on DB20°C, EWT60, same water flow as cooling.
3. Cooling/Heating Capacity, Input Power, Running Current are based on H speed.
4. Noise is measured at an anechoic chamber, 1m from the unit surface.
5. Running current may change according to the conditions.
6. Air volume is based on ESP 50Pa at H speed without plenum and filter.

◀ 15
16

Dimensions

Without Plenum SRC-2HW-4R-DRC-Z SRC-2HW-4R-DRE-Z SRC-2HW-4R-DRC15-Z SRC-2HW-4R-DRE15-Z SRC-2HW-4R-DRC24-Z SRC-2HW-4R-DRE24-Z

With Plenum SRC-2HW-4R-DRC-P/PW/PC SRC-2HW-4R-DRE-P/PW/PC SRC-2HW-4R-DRC15-P/PW/PC SRC-2HW-4R-DRE15-P/PW/PC SRC-2HW-4R-DRC24-P/PW/PC SRC-2HW-4R-DRE24-P/PW/PC

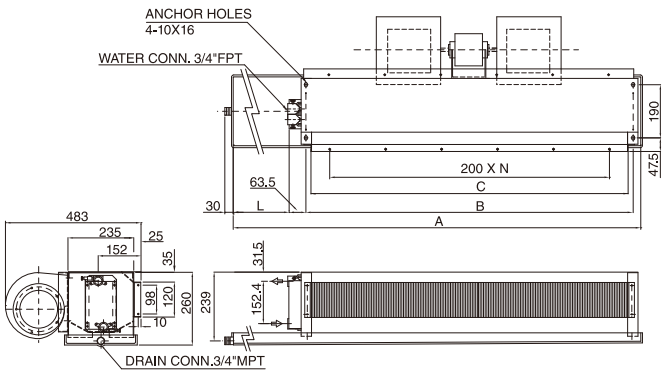

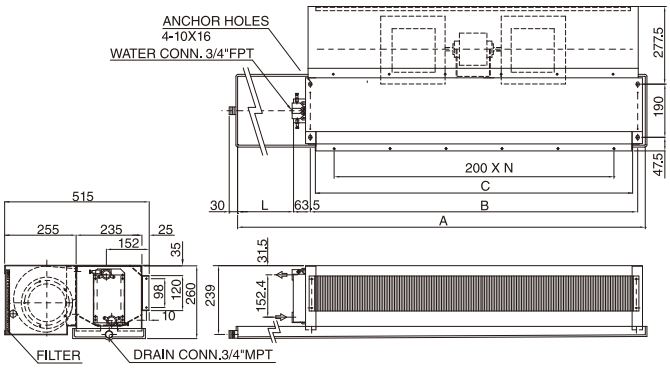

Unit Size	-Z/P/PW/PE/PC		15-Z/P/PW/PE/PC		24-Z/P/PW/PE/PC		B	C	N	NO. OF FAN	NO. OF MOTOR
	A	L	A	L	A	L					
SRC- 300-2HW-4R-DRC(E)	635	50	785	200	875	290	500	462	2	1	1
SRC- 400-2HW-4R-DRC(E)	885	50	1035	200	1125	290	750	712	3	2	1
SRC- 600-2HW-4R-DRC(E)	1020	50	1170	200	1260	290	885	847	4	2	1
SRC- 800-2HW-4R-DRC(E)	1305	50	1455	200	1545	290	1170	1132	5	2	1
SRC-1000-2HW-4R-DRC(E)	1490	50	1640	200	1730	290	1340	1302	6	3	2
SRC-1200-2HW-4R-DRC(E)	1740	50	1890	200	1980	290	1590	1552	7	4	2
SRC-1400-2HW-4R-DRC(E)	1920	50	2070	200	2160	290	1770	1732	8	4	2

Note:
1. Left hand unit is shown.
2. Furnish access door to service fan motor.
3. Wiring works between motor and switch, and unit to power source by contractors.
4. Unit shall be mounted horizontally.
5. To prevent condensation, fan interlock valve shall be furnished so that water supply will be stopped when fan is off.

Ceiling Recessed Model-High Static Model
2-Row Cooling,1-Row Heating

SRC-2HW-DC1-DRC -Z/P/PW/PC

SRC-2HW-DC1-DRE -Z/P/PW/PE

220V

Specification

Unit Size		300	400	600	800	1000	1200	1400
Air Volume l/s	H	154	226	283	340	460	552	655
	M	135	183	259	285	410	506	570
	L	104	144	213	210	336	418	432
Cooling Capacity kW	SH	1.2	2.0	2.6	3.3	3.9	4.9	5.7
	TH	1.4	2.5	3.2	4.3	4.7	6.0	7.1
Heating Capacity kW		3.6	5.6	6.9	8.8	11.1	13.4	15.8
Water Flow l/s		0.07	0.12	0.16	0.21	0.23	0.29	0.35
W.P.D. kPa		3	11	20	41	9	15	23
Input Power W		68	94	119	155	204	234	283
Running Current A		0.31	0.43	0.55	0.71	0.94	1.07	1.30
Noise dB(A)	H	48.5	46.5	48.5	50.5	52.0	51.0	54.5
	M	45.0	41.0	46.5	46.5	49.0	49.0	51.0
	L	38.5	35.5	42.5	39.5	44.5	44.5	44.0
Weight kg (without plenum)		19	22	24	28	36	42	45
Weight kg (with plenum)		23	27	30	35	44	55	60
Holding Water Volume L		0.8	1.1	1.3	1.7	2.0	2.4	2.7
Casing		Galvanized Steel						
Fan		Galvanized sheet fabricated, Forward-Curved DIDW Fan						
Motor		3-Speed, PSC with Capacitor Cap and Flexible Conduit						
Power Source		AC220V, 50Hz, Single Phase						
Coil		Slit Surfaced, Aluminum Finned Coil complete with Female Sockets at Inlet/Outlet Conn. And Air Vent						
Operating Pressure		Max 1700kPa (250psig) unless otherwise specified						
Drain Pan		Stainless Steel, SUS430						

Note:
1. Cooling capacity is based on DB24°C, WB17.8°C, EWT7°C, LWT12°C.
2. Heating capacity is based on DB20°C, EWT60, same water flow as cooling.
3. Cooling/Heating Capacity, Input Power, Running Current are based on H speed.
4. Noise is measured at an anechoic chamber, 1m from the unit surface.
5. Running current may change according to the conditions.
6. Air volume is based on ESP 50Pa at H speed without plenum and filter.

Dimensions

Without Plenum SRC-2HW-DC1-DRC-Z SRC-2HW-DC1-DRE-Z SRC-2HW-DC1-DRC15-Z SRC-2HW-DC1-DRE15-Z SRC-2HW-DC1-DRC24-Z SRC-2HW-DC1-DRE24-Z

With Plenum SRC-2HW-DC1-DRC-P/PW/PC SRC-2HW-DC1-DRE-P/PW/PC SRC-2HW-DC1-DRC15-P/PW/PC SRC-2HW-DC1-DRE15-P/PW/PC SRC-2HW-DC1-DRC24-P/PW/PC SRC-2HW-DC1-DRE24-P/PW/PC

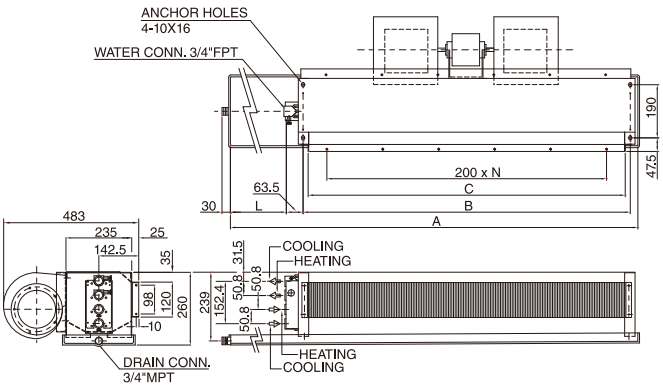

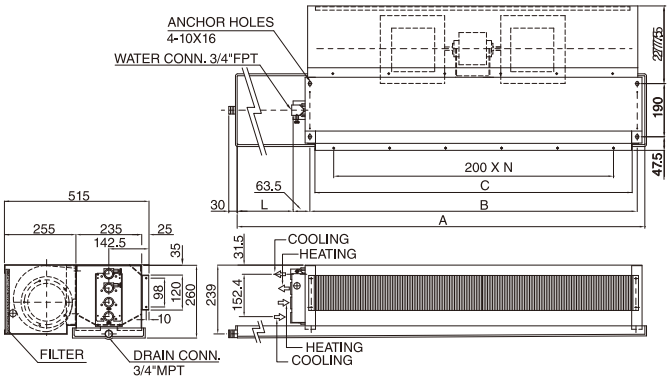

Unit Size	-Z/P/PW/PE/PC		15-Z/P/PW/PE/PC		24-Z/P/PW/PE/PC		B	C	N	NO. OF FAN	NO. OF MOTOR
	A	L	A	L	A	L					
SRC- 300-2HW-DC1-DRC(E)	635	50	785	200	875	290	500	462	2	1	1
SRC- 400-2HW-DC1-DRC(E)	885	50	1035	200	1125	290	750	712	3	2	1
SRC- 600-2HW-DC1-DRC(E)	1020	50	1170	200	1260	290	885	847	4	2	1
SRC- 800-2HW-DC1-DRC(E)	1305	50	1455	200	1545	290	1170	1132	5	2	1
SRC-1000-2HW-DC1-DRC(E)	1490	50	1640	200	1730	290	1340	1302	6	3	2
SRC-1200-2HW-DC1-DRC(E)	1740	50	1890	200	1980	290	1590	1552	7	4	2
SRC-1400-2HW-DC1-DRC(E)	1920	50	2070	200	2160	290	1770	1732	8	4	2

Note:
1. Left hand unit is shown.
2. Furnish access door to service fan motor.
3. Wiring works between motor and switch, and unit to power source by contractors.
4. Unit shall be mounted horizontally.
5. To prevent condensation, fan interlock valve shall be furnished so that water supply will be stopped when fan is off.

Ceiling Recessed Model-High Static Model
3-Row Cooling, 1-Row Heating

SRC-2HW-DC2-DRC -Z/P/PW/PC

SRC-2HW-DC2-DRE -Z/P/PW/PE

220V

Specification

Unit Size		300	400	600	800	1000	1200	1400
Air Volume l/s	H	142	206	259	333	537	508	609
	M	127	166	237	283	493	418	533
	L	99	132	197	213	409	320	412
Cooling Capacity kW	SH	1.4	2.3	2.9	3.9	5.8	5.6	6.7
	TH	1.7	3.0	3.9	5.4	7.6	7.3	8.8
Heating Capacity kW		4.3	6.5	8.2	10.8	16.6	15.9	18.9
Water Flow l/s		0.09	0.15	0.19	0.26	0.37	0.36	0.43
W.P.D. kPa		2	8	14	31	12	11	17
Input Power W		65	91	115	148	231	192	275
Running Current A		0.30	0.42	0.53	0.68	1.06	0.87	1.26
Noise dB(A)	H	50.0	48.0	50.0	51.0	51.5	47.5	55.0
	M	45.5	44.5	48.5	47.0	50.0	43.5	52.0
	L	40.5	37.5	44.5	40.5	45.0	37.5	46.0
Weight kg (without plenum)		15.1	19.8	21.8	26	39.9	39.9	42.5
Weight kg (with plenum)		17.7	23.2	26	31.3	46.2	46.2	50.5
Holding Water Volume L		1.0	1.5	1.8	2.3	3.2	3.2	3.5
Casing		Galvanized Steel						
Fan		Galvanized sheet fabricated, Forward-Curved DIDW Fan						
Motor		3-Speed, PSC with Capacitor Cap and Flexible Conduit						
Power Source		AC220V, 50Hz, Single Phase						
Coil		Slit Surfaced, Aluminum Finned Coil complete with Female Sockets at Inlet/Outlet Conn. And Air Vent						
Operating Pressure		Max 1700kPa (250psig) unless otherwise specified						
Drain Pan		Stainless Steel, SUS430						

Note:
1. Cooling capacity is based on DB24°C, WB17.8°C, EWT7°C, LWT12°C.
2. Heating capacity is based on DB20°C, EWT60, same water flow as cooling.
3. Cooling/Heating Capacity, Input Power, Running Current are based on H speed.
4. Noise is measured at an anechoic chamber, 1m from the unit surface.
5. Running current may change according to the conditions.
6. Air volume is based on ESP 50Pa at H speed without plenum and filter.

◀ 17
18

Dimensions

Without Plenum SRC-2HW-DC2-DRC-Z SRC-2HW-DC2-DRE-Z SRC-2HW-DC2-DRC15-Z SRC-2HW-DC2-DRE15-Z SRC-2HW-DC2-DRC24-Z SRC-2HW-DC2-DRE24-Z

With Plenum SRC-2HW-DC2-DRC-P/PW/PC SRC-2HW-DC2-DRE-P/PW/PC SRC-2HW-DC2-DRC15-P/PW/PC SRC-2HW-DC2-DRE15-P/PW/PC SRC-2HW-DC2-DRC24-P/PW/PC SRC-2HW-DC2-DRE24-P/PW/PC

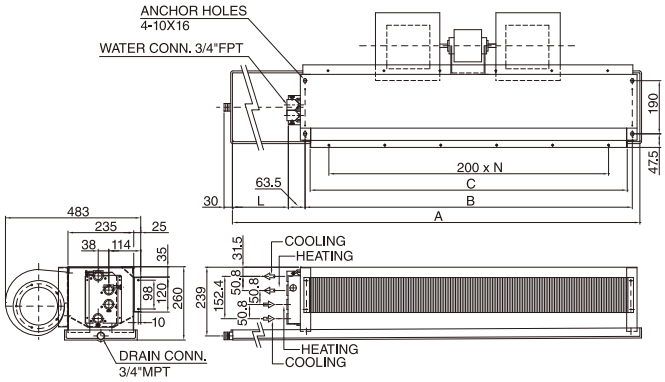

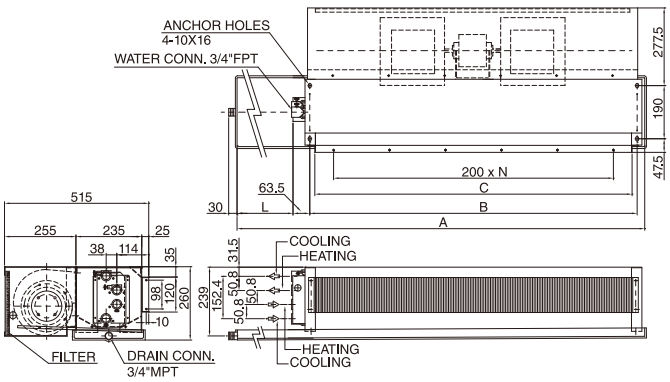

Unit Size	-Z/P/PW/PE/PC		15-Z/P/PW/PE/PC		24-Z/P/PW/PE/PC		B	C	N	NO. OF FAN	NO. OF MOTOR
	A	L	A	L	A	L					
SRC- 300-2HW-DC2-DRC(E)	635	50	785	200	875	290	500	462	2	1	1
SRC- 400-2HW-DC2-DRC(E)	885	50	1035	200	1125	290	750	712	3	2	1
SRC- 600-2HW-DC2-DRC(E)	1020	50	1170	200	1260	290	885	847	4	2	1
SRC- 800-2HW-DC2-DRC(E)	1305	50	1455	200	1545	290	1170	1132	5	2	1
SRC-1000-2HW-DC2-DRC(E)	1490	50	1640	200	1730	290	1340	1302	6	3	2
SRC-1200-2HW-DC2-DRC(E)	1740	50	1890	200	1980	290	1590	1552	7	4	2
SRC-1400-2HW-DC2-DRC(E)	1920	50	2070	200	2160	290	1770	1732	8	4	2

Note:
1. Left hand unit is shown.
2. Furnish access door to service fan motor.
3. Wiring works between motor and switch, and unit to power source by contractors.
4. Unit shall be mounted horizontally.
5. To prevent condensation, fan interlock valve shall be furnished so that water supply will be stopped when fan is off.

Ceiling Recessed Model-High Static Model
4-Row, High Temperature Rise

SRC-2HW-HT-DRC -Z/P/PW/PC

SRC-2HW-HT-DRE -Z/P/PW/PE

220V

Specification

Unit Size		300	400	600	800	1000	1200	1400
Air Volume l/s	H	142	206	259	333	422	537	609
	M	127	166	237	283	384	493	533
	L	99	132	197	213	318	409	412
Cooling Capacity kW	SH	1.6	2.4	3.1	4.1	4.9	6.2	7.1
	TH	2.1	3.4	4.4	6.1	6.7	8.7	10.1
Heating Capacity kW		4.6	6.9	8.7	11.3	13.7	17.4	19.8
Water Flow l/s		0.08	0.12	0.16	0.21	0.23	0.3	0.35
W.P.D. kPa		7	21	38	85	18	32	46
Input Power W		65	91	115	148	190	231	275
Running Current A		0.30	0.42	0.53	0.68	0.86	1.06	1.26
Noise dB(A)	H	50.0	48.0	50.0	51.0	53.0	51.5	55.0
	M	45.5	44.5	48.5	47.0	50.5	50.0	52.0
	L	40.5	37.5	44.5	40.5	46.5	45.0	46.0
Weight kg (without plenum)		15.1	19.8	21.8	26	34.6	39.9	42.5
Weight kg (with plenum)		17.7	23.2	26	31.3	40.5	46.2	50.5
Holding Water Volume L		1.0	1.5	1.8	2.3	2.7	3.2	3.5
Casing		Galvanized Steel						
Fan		Galvanized sheet fabricated, Forward-Curved DIDW Fan						
Motor		3-Speed, PSC with Capacitor Cap and Flexible Conduit						
Power Source		AC220V, 50Hz, Single Phase						
Coil		Slit Surfaced, Aluminum Finned Coil complete with Female Sockets at Inlet/Outlet Conn. And Air Vent						
Operating Pressure		Max 1700kPa (250psig) unless otherwise specified						
Drain Pan		Stainless Steel, SUS430						

Note:
1. Cooling capacity is based on DB24°C, WB17.8°C, EWT7°C, LWT14°C.
2. Heating capacity is based on DB20°C, EWT60, same water flow as cooling.
3. Cooling/Heating Capacity, Input Power, Running Current are based on H speed.
4. Noise is measured at an anechoic chamber, 1m from the unit surface.
5. Running current may change according to the conditions.
6. Air volume is based on ESP 50Pa at H speed without plenum and filter.

Dimensions

Without Plenum SRC-2HW-HT-DRC-Z, SRC-2HW-HT-DRC15-Z, SRC-2HW-HT-DRC24-Z, SRC-2HW-HT-DRE-Z, SRC-2HW-HT-DRE15-Z, SRC-2HW-HT-DRE24-Z

With Plenum SRC-2HW-HT-DRC-P/PW/PC, SRC-2HW-HT-DRC15-P/PW/PC, SRC-2HW-HT-DRC24-P/PW/PC, SRC-2HW-HT-DRE-P/PW/PC, SRC-2HW-HT-DRE15-P/PW/PC, SRC-2HW-HT-DRE24-P/PW/PC

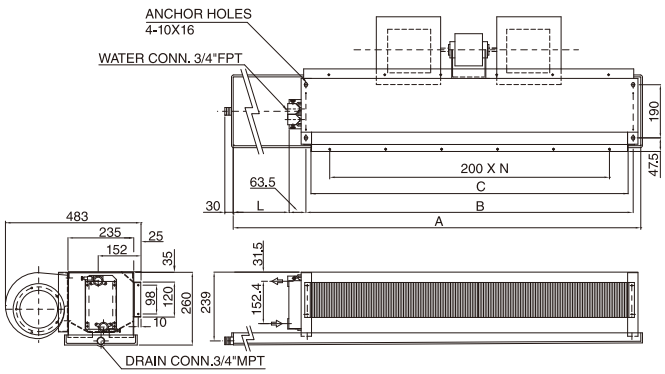

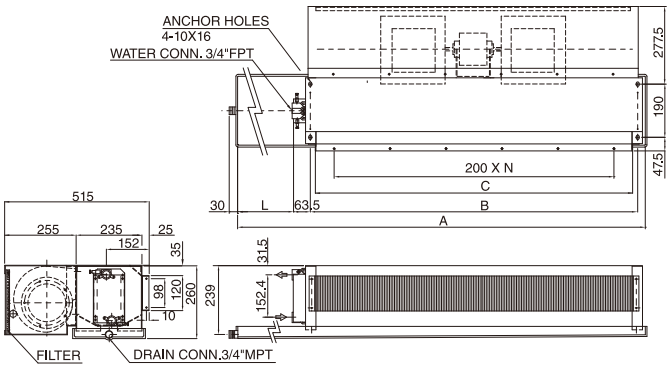

Unit Size	-Z/P/PW/PE/PC		15-Z/P/PW/PE/PC		24-Z/P/PW/PE/PC		B	C	N	NO. OF FAN	NO. OF MOTOR
	A	L	A	L	A	L					
SRC- 300-2HW-HT-DRC(E)	635	50	785	200	875	290	500	462	2	1	1
SRC- 400-2HW-HT-DRC(E)	885	50	1035	200	1125	290	750	712	3	2	1
SRC- 600-2HW-HT-DRC(E)	1020	50	1170	200	1260	290	885	847	4	2	1
SRC- 800-2HW-HT-DRC(E)	1305	50	1455	200	1545	290	1170	1132	5	2	1
SRC-1000-2HW-HT-DRC(E)	1490	50	1640	200	1730	290	1340	1302	6	3	2
SRC-1200-2HW-HT-DRC(E)	1740	50	1890	200	1980	290	1590	1552	7	4	2
SRC-1400-2HW-HT-DRC(E)	1920	50	2070	200	2160	290	1770	1732	8	4	2

Note:
1. Left hand unit is shown.
2. Furnish access door to service fan motor.
3. Wiring works between motor and switch, and unit to power source by contractors.
4. Unit shall be mounted horizontally.
5. To prevent condensation, fan interlock valve shall be furnished so that water supply will be stopped when fan is off.

Ceiling Recessed Model-Large Air Volume Model
3-Row Cooling/Heating

SRC-2SH-3R-DRC -Z/P/PW/PC

SRC-2SH-3R-DRE -Z/P/PW/PE

220V

Specification

Unit Size		300	400	600	800	1000	1200	1400
Air Volume l/s	H	161	278	291	389	548	560	738
	M	147	263	275	369	516	528	708
	L	127	219	229	300	429	441	586
Cooling Capacity kW	SH	1.5	2.9	3.2	4.4	5.5	6.0	7.7
	TH	1.9	3.7	4.2	6.0	6.9	7.8	10.1
Heating Capacity kW		4.6	8.0	8.8	11.9	15.4	16.6	21.1
Water Flow l/s		0.09	0.18	0.21	0.29	0.34	0.38	0.49
W.P.D. kPa		3	11	16	38	9	12	21
Input Power W		80	129	131	192	265	256	365
Running Current A		0.36	0.61	0.62	0.91	1.23	1.20	1.75
Noise dB(A)	H	48.5	48.0	49.0	52.5	53.0	51.5	56.0
	M	46.0	47.0	48.0	51.5	52.0	50.5	55.0
	L	42.0	42.0	44.0	46.5	48.0	46.0	50.0
Weight kg (without plenum)		19	22	24	28	36	42	45
Weight kg (with plenum)		23	27	30	35	44	55	60
Holding Water Volume L		0.8	1.1	1.3	1.7	2.0	2.4	2.7
Casing		Galvanized Steel						
Fan		Galvanized sheet fabricated, Forward-Curved DIDW Fan						
Motor		3-Speed, PSC with Capacitor Cap and Flexible Conduit						
Power Source		AC220V, 50Hz, Single Phase						
Coil		Slit Surfaced, Aluminum Finned Coil complete with Female Sockets at Inlet/Outlet Conn. And Air Vent						
Operating Pressure		Max 1700kPa (250psig) unless otherwise specified						
Drain Pan		Stainless Steel, SUS430						

Note:
1. Cooling capacity is based on DB24°C, WB17.8°C, EWT7°C, LWT12°C.
2. Heating capacity is based on DB20°C, EWT60, same water flow as cooling.
3. Cooling/Heating Capacity, Input Power, Running Current are based on H speed.
4. Noise is measured at an anechoic chamber, 1m from the unit surface.
5. Running current may change according to the conditions.
6. Air volume is based on ESP 50Pa at H speed without plenum and filter.

Dimensions

◀ 19
20

Without Plenum SRC-2SH-3R-DRC-Z SRC-2SH-3R-DRE-Z
SRC-2SH-3R-DRC15-Z SRC-2SH-3R-DRE15-Z
SRC-2SH-3R-DRC24-Z SRC-2SH-3R-DRE24-Z

With Plenum SRC-2SH-3R-DRC-P/PW/PC SRC-2SH-3R-DRE-P/PW/PC
SRC-2SH-3R-DRC15-P/PW/PC SRC-2SH-3R-DRE15-P/PW/PC
SRC-2SH-3R-DRC24-P/PW/PC SRC-2SH-3R-DRE24-P/PW/PC

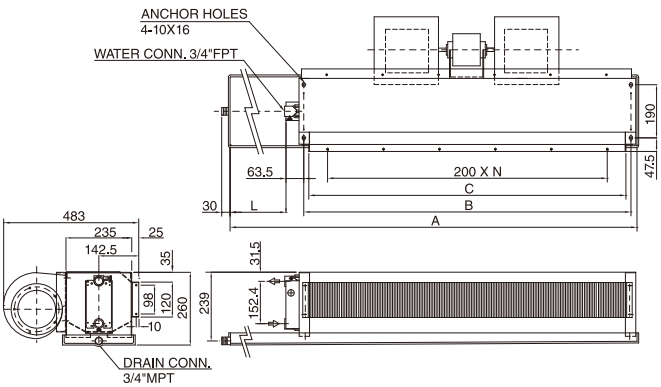

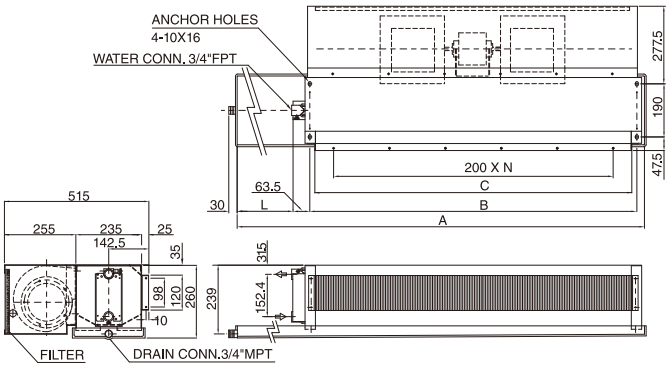

Unit Size	-Z/P/PW/PE/PC		15-Z/P/PW/PE/PC		24-Z/P/PW/PE/PC		B	C	N	NO. OF FAN	NO. OF MOTOR
	A	L	A	L	A	L					
SRC- 300-2SH-3R-DRC(E)	635	50	785	200	875	290	500	462	2	1	1
SRC- 400-2SH-3R-DRC(E)	885	50	1035	200	1125	290	750	712	3	2	1
SRC- 600-2SH-3R-DRC(E)	1020	50	1170	200	1260	290	885	847	4	2	1
SRC- 800-2SH-3R-DRC(E)	1305	50	1455	200	1545	290	1170	1132	5	2	1
SRC-1000-2SH-3R-DRC(E)	1490	50	1640	200	1730	290	1340	1302	6	3	2
SRC-1200-2SH-3R-DRC(E)	1740	50	1890	200	1980	290	1590	1552	7	4	2
SRC-1400-2SH-3R-DRC(E)	1920	50	2070	200	2160	290	1770	1732	8	4	2

Note:
1. Left hand unit is shown.
2. Furnish access door to service fan motor.
3. Wiring works between motor and switch, and unit to power source by contractors.
4. Unit shall be mounted horizontally.
5. To prevent condensation, fan interlock valve shall be furnished so that water supply will be stopped when fan is off.

Ceiling Recessed Model-Large Air Volume Model
4-Row Cooling/Heating

SRC-2SH-4R-DRC -Z/P/PW/PC

SRC-2SH-4R-DRE -Z/P/PW/PE

220V

Specification

Unit Size		300	400	600	800	1000	1200	1400
Air Volume l/s	H	148	246	265	374	482	541	667
	M	137	233	251	359	461	511	646
	L	120	197	212	294	396	429	550
Cooling Capacity kW	SH	1.6	2.9	3.3	4.8	5.6	6.5	8.0
	TH	2.0	3.9	4.5	6.8	7.4	8.7	10.9
Heating Capacity kW		4.9	8.3	9.2	13.1	16.0	18.3	22.3
Water Flow l/s		0.1	0.19	0.22	0.33	0.36	0.42	0.53
W.P.D. kPa		2	8	11	28	6	9	15
Input Power W		75	121	125	185	240	248	339
Running Current A		0.34	0.58	0.59	0.87	1.12	1.17	1.63
Noise dB(A)	H	50.0	49.5	50.0	53.0	54.5	52.5	56.5
	M	48.5	48.5	48.5	52.0	53.5	51.0	55.5
	L	45.0	44.5	45.0	47.0	49.5	46.5	51.5
Weight kg (without plenum)		15.1	19.8	21.8	26	34.6	39.9	42.5
Weight kg (with plenum)		17.7	23.2	26	31.3	40.5	46.2	50.5
Holding Water Volume L		1.0	1.5	1.8	2.3	2.7	3.2	3.5
Casing		Galvanized Steel						
Fan		Galvanized sheet fabricated, Forward-Curved DIDW Fan						
Motor		3-Speed, PSC with Capacitor Cap and Flexible Conduit						
Power Source		AC220V, 50Hz, Single Phase						
Coil		Slit Surfaced, Aluminum Finned Coil complete with Female Sockets at Inlet/Outlet Conn. And Air Vent						
Operating Pressure		Max 1700kPa (250psig) unless otherwise specified						
Drain Pan		Stainless Steel, SUS430						

Note:
1. Cooling capacity is based on DB24°C, WB17.8°C, EWT7°C, LWT12°C.
2. Heating capacity is based on DB20°C, EWT60, same water flow as cooling.
3. Cooling/Heating Capacity, Input Power, Running Current are based on H speed.
4. Noise is measured at an anechoic chamber, 1m from the unit surface.
5. Running current may change according to the conditions.
6. Air volume is based on ESP 50Pa at H speed without plenum and filter.

Dimensions

Without Plenum SRC-2SH-4R-DRC-Z SRC-2SH-4R-DRE-Z
SRC-2SH-4R-DRC15-Z SRC-2SH-4R-DRE15-Z
SRC-2SH-4R-DRC24-Z SRC-2SH-4R-DRE24-Z

With Plenum SRC-2SH-4R-DRC-P/PW/PC SRC-2SH-4R-DRE-P/PW/PC
SRC-2SH-4R-DRC15-P/PW/PC SRC-2SH-4R-DRE15-P/PW/PC
SRC-2SH-4R-DRC24-P/PW/PC SRC-2SH-4R-DRE24-P/PW/PC

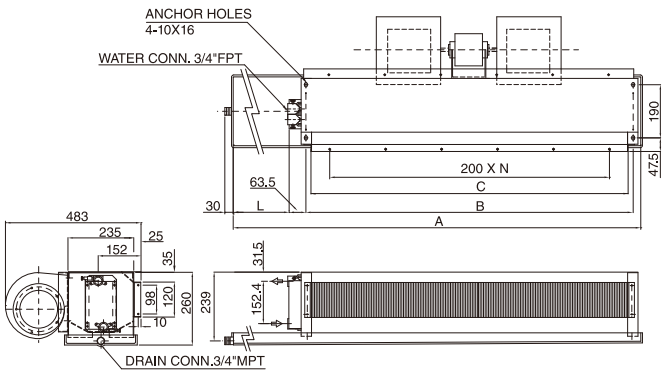

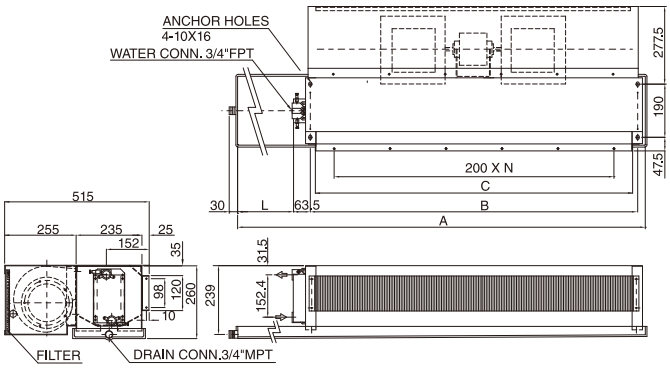

Unit Size	-Z/P/PW/PE/PC		15-Z/P/PW/PE/PC		24-Z/P/PW/PE/PC		B	C	N	NO. OF FAN	NO. OF MOTOR
	A	L	A	L	A	L					
SRC- 300-2SH-4R-DRC(E)	635	50	785	200	875	290	500	462	2	1	1
SRC- 400-2SH-4R-DRC(E)	885	50	1035	200	1125	290	750	712	3	2	1
SRC- 600-2SH-4R-DRC(E)	1020	50	1170	200	1260	290	885	847	4	2	1
SRC- 800-2SH-4R-DRC(E)	1305	50	1455	200	1545	290	1170	1132	5	2	1
SRC-1000-2SH-4R-DRC(E)	1490	50	1640	200	1730	290	1340	1302	6	3	2
SRC-1200-2SH-4R-DRC(E)	1740	50	1890	200	1980	290	1590	1552	7	4	2
SRC-1400-2SH-4R-DRC(E)	1920	50	2070	200	2160	290	1770	1732	8	4	2

Note:
1. Left hand unit is shown.
2. Furnish access door to service fan motor.
3. Wiring works between motor and switch, and unit to power source by contractors.
4. Unit shall be mounted horizontally.
5. To prevent condensation, fan interlock valve shall be furnished so that water supply will be stopped when fan is off.

Ceiling Recessed Model-Large Air Volume Model
2-Row Cooling,1-Row Heating

SRC-2SH-DC1-DRC -Z/P/PW/PC

SRC-2SH-DC1-DRE -Z/P/PW/PE

220V

Specification

Unit Size		300	400	600	800	1000	1200	1400
Air Volume l/s	H	161	278	291	389	548	560	738
	M	147	263	275	369	516	528	708
	L	127	219	229	300	429	441	586
Cooling Capacity kW	SH	1.3	2.3	2.6	3.6	4.4	4.9	6.2
	TH	1.4	2.8	3.3	4.7	5.3	6.0	7.7
Heating Capacity kW		3.7	6.4	7.1	9.6	12.5	13.6	17.2
Water Flow l/s		0.07	0.14	0.16	0.23	0.26	0.29	0.37
W.P.D. kPa		3	14	20	48	11	16	26
Input Power W		80	129	131	192	265	256	365
Running Current A		0.36	0.61	0.62	0.91	1.23	1.20	1.75
Noise dB(A)	H	48.5	48.0	49.0	52.5	53.0	51.5	56.0
	M	46.0	47.0	48.0	51.5	52.0	50.5	55.0
	L	42.0	42.0	44.0	46.5	48.0	46.0	50.0
Weight kg (without plenum)		19	22	24	28	36	42	45
Weight kg (with plenum)		23	27	30	35	44	55	60
Holding Water Volume L		0.8	1.1	1.3	1.7	2.0	2.4	2.7
Casing		Galvanized Steel						
Fan		Galvanized sheet fabricated, Forward-Curved DIDW Fan						
Motor		3-Speed, PSC with Capacitor Cap and Flexible Conduit						
Power Source		AC220V, 50Hz, Single Phase						
Coil		Slit Surfaced, Aluminum Finned Coil complete with Female Sockets at Inlet/Outlet Conn. And Air Vent						
Operating Pressure		Max 1700kPa (250psig) unless otherwise specified						
Drain Pan		Stainless Steel, SUS430						

Note:
1. Cooling capacity is based on DB24°C, WB17.8°C, EWT7°C, LWT12°C.
2. Heating capacity is based on DB20°C, EWT60, same water flow as cooling.
3. Cooling/Heating Capacity, Input Power, Running Current are based on H speed.
4. Noise is measured at an anechoic chamber, 1m from the unit surface.
5. Running current may change according to the conditions.
6. Air volume is based on ESP 50Pa at H speed without plenum and filter.

Dimensions

Without Plenum SRC-2SH-DC1-DRC-Z SRC-2SH-DC1-DRE-Z SRC-2SH-DC1-DRC15-Z SRC-2SH-DC1-DRE15-Z SRC-2SH-DC1-DRC24-Z SRC-2SH-DC1-DRE24-Z

With Plenum SRC-2SH-DC1-DRC-P/PW/PC SRC-2SH-DC1-DRE-P/PW/PC SRC-2SH-DC1-DRC15-P/PW/PC SRC-2SH-DC1-DRE15-P/PW/PC SRC-2SH-DC1-DRC24-P/PW/PC SRC-2SH-DC1-DRE24-P/PW/PC

◀ 21
22

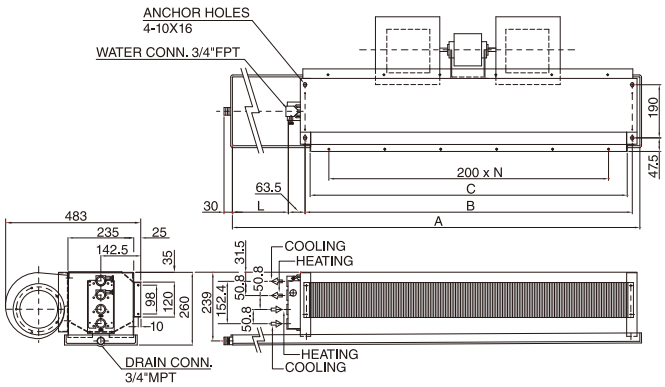

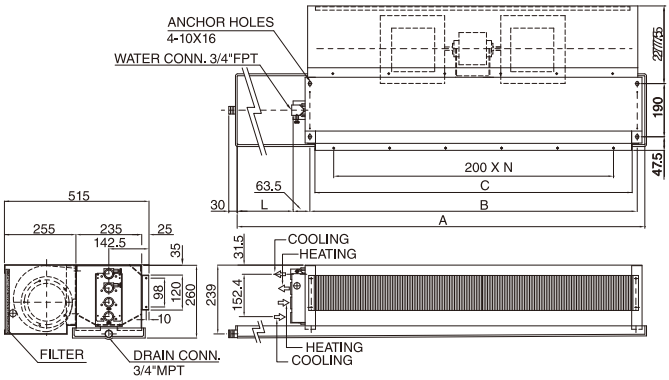

Unit Size	-Z/P/PW/PE/PC		15-Z/P/PW/PE/PC		24-Z/P/PW/PE/PC		B	C	N	NO. OF FAN	NO. OF MOTOR
	A	L	A	L	A	L					
SRC- 300-2SH-DC1-DRC(E)	635	50	785	200	875	290	500	462	2	1	1
SRC- 400-2SH-DC1-DRC(E)	885	50	1035	200	1125	290	750	712	3	2	1
SRC- 600-2SH-DC1-DRC(E)	1020	50	1170	200	1260	290	885	847	4	2	1
SRC- 800-2SH-DC1-DRC(E)	1305	50	1455	200	1545	290	1170	1132	5	2	1
SRC-1000-2SH-DC1-DRC(E)	1490	50	1640	200	1730	290	1340	1302	6	3	2
SRC-1200-2SH-DC1-DRC(E)	1740	50	1890	200	1980	290	1590	1552	7	4	2
SRC-1400-2SH-DC1-DRC(E)	1920	50	2070	200	2160	290	1770	1732	8	4	2

Note:
1. Left hand unit is shown.
2. Furnish access door to service fan motor.
3. Wiring works between motor and switch, and unit to power source by contractors.
4. Unit shall be mounted horizontally.
5. To prevent condensation, fan interlock valve shall be furnished so that water supply will be stopped when fan is off.

Ceiling Recessed Model-Large Air Volume Model
3-Row Cooling, 1-Row Heating

SRC-2SH-DC2-DRC -Z/P/PW/PC

SRC-2SH-DC2-DRE -Z/P/PW/PE

220V

Specification

Unit Size		300	400	600	800	1000	1200	1400
Air Volume l/s	H	148	246	265	374	482	541	667
	M	137	233	251	359	461	511	646
	L	120	197	212	294	396	429	550
Cooling Capacity kW	SH	1.4	2.6	3.0	4.3	5.0	5.8	7.2
	TH	1.8	3.4	3.9	5.9	6.4	7.6	9.4
Heating Capacity kW		4.4	7.5	8.3	11.8	14.5	16.7	20.3
Water Flow l/s		0.09	0.17	0.19	0.29	0.31	0.37	0.46
W.P.D. kPa		3	10	14	36	8	12	19
Input Power W		75	121	125	185	240	248	339
Running Current A		0.34	0.58	0.59	0.87	1.12	1.17	1.63
Noise dB(A)	H	50.0	49.5	50.0	53.0	54.5	52.5	56.5
	M	48.5	48.5	48.5	52.0	53.5	51.0	55.5
	L	45.0	44.5	45.0	47.0	49.5	46.5	51.5
Weight kg (without plenum)		15.1	19.8	21.8	26	34.6	39.9	42.5
Weight kg (with plenum)		17.7	23.2	26	31.3	40.5	46.2	50.5
Holding Water Volume L		1.0	1.5	1.8	2.3	2.7	3.2	3.5
Casing		Galvanized Steel						
Fan		Galvanized sheet fabricated, Forward-Curved DIDW Fan						
Motor		3-Speed, PSC with Capacitor Cap and Flexible Conduit						
Power Source		AC220V, 50Hz, Single Phase						
Coil		Slit Surfaced, Aluminum Finned Coil complete with Female Sockets at Inlet/Outlet Conn. And Air Vent						
Operating Pressure		Max 1700kPa (250psig) unless otherwise specified						
Drain Pan		Stainless Steel, SUS430						

Note:
1. Cooling capacity is based on DB24°C, WB17.8°C, EWT7°C, LWT12°C.
2. Heating capacity is based on DB20°C, EWT60, same water flow as cooling.
3. Cooling/Heating Capacity, Input Power, Running Current are based on H speed.
4. Noise is measured at an anechoic chamber, 1m from the unit surface.
5. Running current may change according to the conditions.
6. Air volume is based on ESP 50Pa at H speed without plenum and filter.

Dimensions

Without Plenum SRC-2SH-DC2-DRC-Z SRC-2SH-DC2-DRE-Z SRC-2SH-DC2-DRC15-Z SRC-2SH-DC2-DRE15-Z SRC-2SH-DC2-DRC24-Z SRC-2SH-DC2-DRE24-Z

With Plenum SRC-2SH-DC2-DRC-P/PW/PC SRC-2SH-DC2-DRE-P/PW/PC SRC-2SH-DC2-DRC15-P/PW/PC SRC-2SH-DC2-DRE15-P/PW/PC SRC-2SH-DC2-DRC24-P/PW/PC SRC-2SH-DC2-DRE24-P/PW/PC

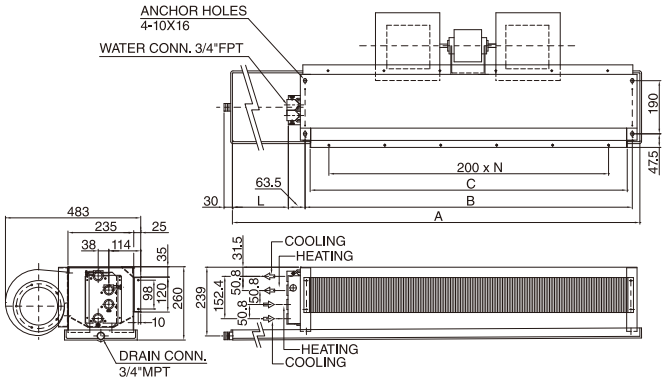

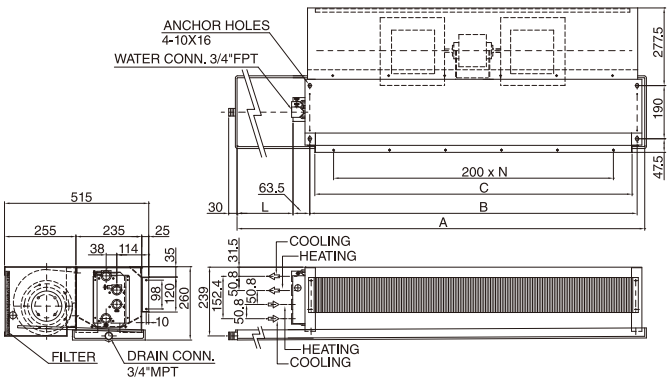

Unit Size	-Z/P/PW/PE/PC		15-Z/P/PW/PE/PC		24-Z/P/PW/PE/PC		B	C	N	NO. OF FAN	NO. OF MOTOR
	A	L	A	L	A	L					
SRC- 300-2SH-DC2-DRC(E)	635	50	785	200	875	290	500	462	2	1	1
SRC- 400-2SH-DC2-DRC(E)	885	50	1035	200	1125	290	750	712	3	2	1
SRC- 600-2SH-DC2-DRC(E)	1020	50	1170	200	1260	290	885	847	4	2	1
SRC- 800-2SH-DC2-DRC(E)	1305	50	1455	200	1545	290	1170	1132	5	2	1
SRC-1000-2SH-DC2-DRC(E)	1490	50	1640	200	1730	290	1340	1302	6	3	2
SRC-1200-2SH-DC2-DRC(E)	1740	50	1890	200	1980	290	1590	1552	7	4	2
SRC-1400-2SH-DC2-DRC(E)	1920	50	2070	200	2160	290	1770	1732	8	4	2

Note:
1. Left hand unit is shown.
2. Furnish access door to service fan motor.
3. Wiring works between motor and switch, and unit to power source by contractors.
4. Unit shall be mounted horizontally.
5. To prevent condensation, fan interlock valve shall be furnished so that water supply will be stopped when fan is off.

Ceiling Recessed Model-Large Air Volume Model
4-Row, High Temperature Rise

SRC-2SH-HT-DRC -Z/P/PW/PC

SRC-2SH-HT-DRE -Z/P/PW/PE

220V

Specification

Unit Size		300	400	600	800	1000	1200	1400
Air Volume l/s	H	148	246	265	374	482	541	667
	M	137	233	251	359	461	511	646
	L	120	197	212	294	396	429	550
Cooling Capacity kW	SH	1.6	2.8	3.1	4.5	5.4	6.2	7.6
	TH	2.1	3.9	4.5	6.7	7.4	8.7	10.8
Heating Capacity kW		4.7	7.9	8.8	12.5	15.3	17.5	21.3
Water Flow l/s		0.08	0.14	0.16	0.23	0.26	0.3	0.37
W.P.D. kPa		7	26	39	99	21	32	52
Input Power W		75	121	125	185	240	248	339
Running Current A		0.34	0.58	0.59	0.87	1.12	1.17	1.63
Noise dB(A)	H	50.0	49.5	50.0	53.0	54.5	52.5	56.5
	M	48.5	48.5	48.5	52.0	53.5	51.0	55.5
	L	45.0	44.5	45.0	47.0	49.5	46.5	51.5
Weight kg (without plenum)		15.1	19.8	21.8	26	34.6	39.9	42.5
Weight kg (with plenum)		17.7	23.2	26	31.3	40.5	46.2	50.5
Holding Water Volume L		1.0	1.5	1.8	2.3	2.7	3.2	3.5
Casing		Galvanized Steel						
Fan		Galvanized sheet fabricated, Forward-Curved DIDW Fan						
Motor		3-Speed, PSC with Capacitor Cap and Flexible Conduit						
Power Source		AC220V, 50Hz, Single Phase						
Coil		Slit Surfaced, Aluminum Finned Coil complete with Female Sockets at Inlet/Outlet Conn. And Air Vent						
Operating Pressure		Max 1700kPa (250psig) unless otherwise specified						
Drain Pan		Stainless Steel, SUS430						

Note:
1. Cooling capacity is based on DB24°C, WB17.8°C, EWT7°C, LWT14°C.
2. Heating capacity is based on DB20°C, EWT60, same water flow as cooling.
3. Cooling/Heating Capacity, Input Power, Running Current are based on H speed.
4. Noise is measured at an anechoic chamber, 1m from the unit surface.
5. Running current may change according to the conditions.
6. Air volume is based on ESP 50Pa at H speed without plenum and filter.

Dimensions

Without Plenum SRC-2SH-HT-DRC-Z, SRC-2SH-HT-DRC15-Z, SRC-2SH-HT-DRC24-Z, SRC-2SH-HT-DRE-Z, SRC-2SH-HT-DRE15-Z, SRC-2SH-HT-DRE24-Z

With Plenum SRC-2SH-HT-DRC-P/PW/PC, SRC-2SH-HT-DRC15-P/PW/PC, SRC-2SH-HT-DRC24-P/PW/PC, SRC-2SH-HT-DRE-P/PW/PC, SRC-2SH-HT-DRE15-P/PW/PC, SRC-2SH-HT-DRE24-P/PW/PC

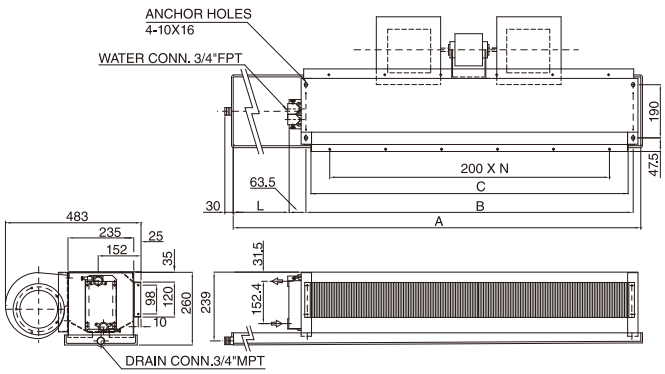

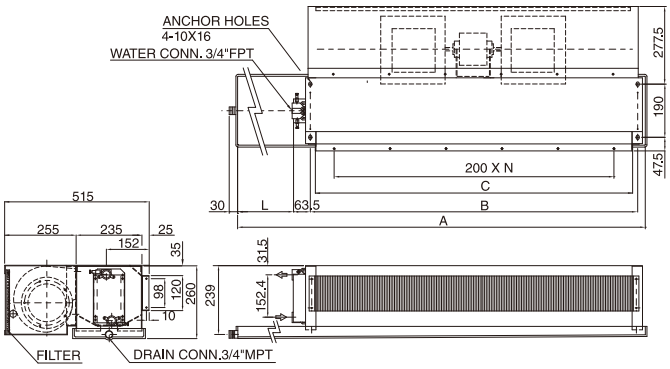

Unit Size	-Z/P/PW/PE/PC		15-Z/P/PW/PE/PC		24-Z/P/PW/PE/PC		B	C	N	NO. OF FAN	NO. OF MOTOR
	A	L	A	L	A	L					
SRC- 300-2SH-HT-DRC(E)	635	50	785	200	875	290	500	462	2	1	1
SRC- 400-2SH-HT-DRC(E)	885	50	1035	200	1125	290	750	712	3	2	1
SRC- 600-2SH-HT-DRC(E)	1020	50	1170	200	1260	290	885	847	4	2	1
SRC- 800-2SH-HT-DRC(E)	1305	50	1455	200	1545	290	1170	1132	5	2	1
SRC-1000-2SH-HT-DRC(E)	1490	50	1640	200	1730	290	1340	1302	6	3	2
SRC-1200-2SH-HT-DRC(E)	1740	50	1890	200	1980	290	1590	1552	7	4	2
SRC-1400-2SH-HT-DRC(E)	1920	50	2070	200	2160	290	1770	1732	8	4	2

Note:
1. Left hand unit is shown.
2. Furnish access door to service fan motor.
3. Wiring works between motor and switch, and unit to power source by contractors.
4. Unit shall be mounted horizontally.
5. To prevent condensation, fan interlock valve shall be furnished so that water supply will be stopped when fan is off.

23
24

Ceiling Recessed, High Static, Large Air Volume Model

4-Row Cooling/Heating

TCRH-600-2HW-4R-DRC -Z/P/PW/PC

TCRH-600-2HW-4R-DRE -Z/P/PW/PE

220V

Specification

Unit Size		600
Air Volume l/s	H	390
	M	356
	L	315
Cooling Capacity kW	SH	4.8
	TH	6.6
Heating Capacity kW		13.1
Water Flow l/s		0.32
W.P.D. kPa		21
Input Power W		262
Running Current A		1.18
Noise dB(A)	H	56.5
	M	55.0
	L	53.0
Weight kg (without plenum)		35
Weight kg (with plenum)		37
Holding Water Volume L		2.6
Casing		Galvanized Steel
Fan		Galvanized sheet fabricated, Forward-Curved DIDW Fan
Motor		3-Speed, PSC with Capacitor Cap and Flexible Conduit
Power Source		AC220V, 50Hz, Single Phase
Coil		Slit Surfaced, Aluminum Finned Coil complete with Female Sockets at Inlet/Outlet Conn. And Air Vent
Operating Pressure		Max 1700kPa (250psig) unless otherwise specified
Drain Pan		Stainless Steel, SUS430

Note:
1. Cooling capacity is based on DB24°C, WB17.8°C, EWT7°C, LWT12°C.
2. Heating capacity is based on DB20°C, EWT60, same water flow as cooling.
3. Cooling/Heating Capacity, Input Power, Running Current are based on H speed.
4. Noise is measured at an anechoic chamber, 1m from the unit surface.
5. Running current may change according to the conditions.
6. Air volume is based on ESP 100Pa at H speed without plenum and filter.

Dimensions

Without Plenum TCRH-600-2HW-4R-DRC-Z
TCRH-600-2HW-4R-DRC15-Z
TCRH-600-2HW-4R-DRE-Z
TCRH-600-2HW-4R-DRE15-Z

With Plenum TCRH-600-2HW-4R-DRC-P/PW/PC
TCRH-600-2HW-4R-DRC15-P/PW/PC
TCRH-600-2HW-4R-DRE-P/PW/PC
TCRH-600-2HW-4R-DRE15-P/PW/PC

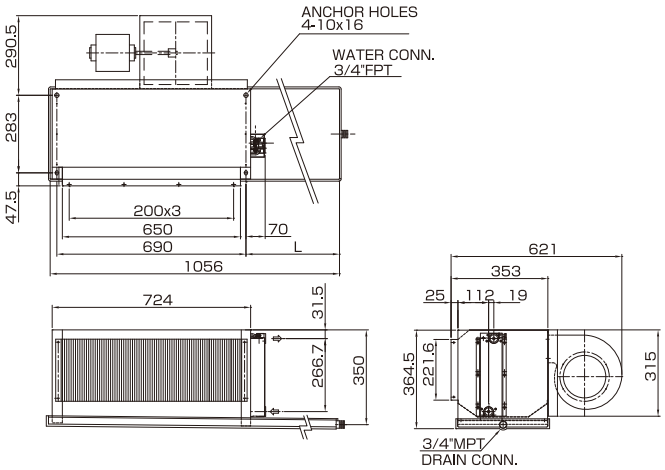

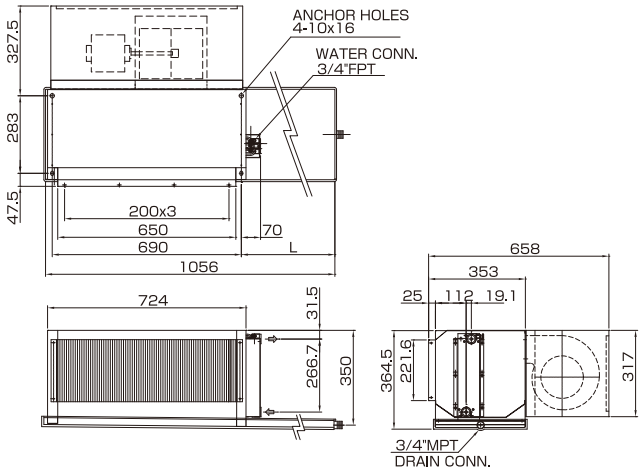

Unit Size	-Z/P/PW/PE/PC	15-Z/P/PW/PE/PC
	L	L
TCRH- 600-2HW-4R-DRC(E)	191.4	341.4

Note:
1. Right hand unit is shown.
2. Furnish access door to service fan motor.
3. Wiring works between motor and switch, and unit to power source by contractors.
4. Unit shall be mounted horizontally.
5. To prevent condensation, fan interlock valve shall be furnished so that water supply will be stopped when fan is off.

Ceiling Recessed, High Static, Large Air Volume Model

4-Row Cooling/Heating

TCRH-[1000/1200/1600/2000]-2HW-4R-DRC -Z/P/PW/PC

TCRH-[1000/1200/1600/2000]-2HW-4R-DRE -Z/P/PW/PC

220V

Specification

Unit Size		1000	1200	1600	2000
Air Volume l/s	H	627	663	893	1079
	M	572	637	844	1041
	L	491	582	770	944
Cooling Capacity kW	SH	7.6	8.1	10.9	13.5
	TH	11.2	10.9	15.2	20.1
Heating Capacity kW		20.6	22.0	29.2	37.1
Water Flow l/s		0.54	0.53	0.73	0.97
W.P.D. kPa		23	5	9	19
Input Power W		396	409	571	677
Running Current A		1.82	1.89	2.64	3.12
Noise dB(A)	H	56.0	57.0	58.5	59.0
	M	54.5	56.5	57.5	58.0
	L	52.5	55.0	55.5	55.0
Weight kg (without plenum)		40	46	60	72
Weight kg (with plenum)		44	52	68	82
Holding Water Volume L		3.1	3.9	4.5	5.7
Casing		Galvanized Steel			
Fan		Galvanized sheet fabricated, Forward-Curved DIDW Fan			
Motor		3-Speed, PSC with Capacitor Cap and Flexible Conduit			
Power Source		AC220V, 50Hz, Single Phase			
Coil		Slit Surfaced, Aluminum Finned Coil complete with Female Sockets at Inlet/Outlet Conn. And Air Vent			
Operating Pressure		Max 1700kPa (250psig) unless otherwise specified			
Drain Pan		Stainless Steel, SUS430			

Note:
1. Cooling capacity is based on DB24°C, WB17.8°C, EWT7°C, LWT12°C.
2. Heating capacity is based on DB20°C, EWT60, same water flow as cooling.
3. Cooling/Heating Capacity, Input Power, Running Current are based on H speed.
4. Noise is measured at an anechoic chamber, 1m from the unit surface.
5. Running current may change according to the conditions.
6. Air volume is based on ESP 100Pa at H speed without plenum and filter.

Dimensions

Without Plenum TCRH-2HW-4R-DRC-Z TCRH-2HW-4R-DRE-Z TCRH-2HW-4R-DRC15-Z TCRH-2HW-4R-DRE15-Z

With Plenum TCRH-2HW-4R-DRC-P/PW/PC TCRH-2HW-4R-DRE-P/PW/PC TCRH-2HW-4R-DRC15-P/PW/PC TCRH-2HW-4R-DRE15-P/PW/PC

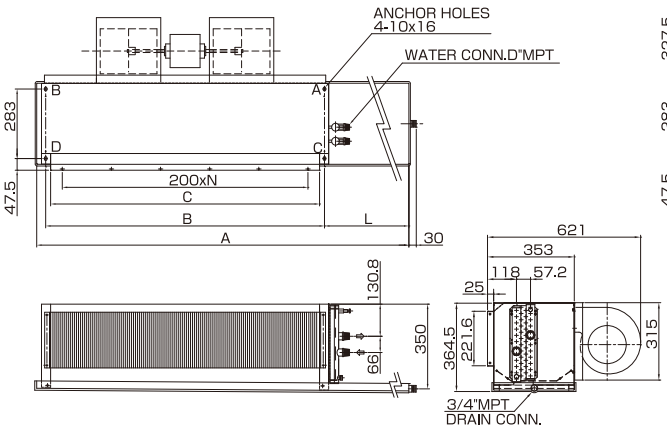

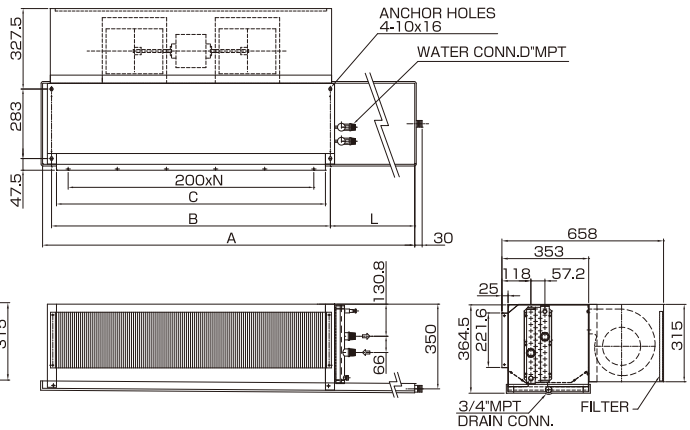

Unit Size	-Z/P/PW/PE/PC		15-Z/P/PW/PE/PC		B	C	N	D	NO. OF FAN	NO. OF MOTOR
	A	L	A	L						
TCRH-1000-2HW-4R-DRC(E)	1050	122	1200	272	885	847	4	1	2	1
TCRH-1200-2HW-4R-DRC(E)	1335	157	1485	307	1135	1097	5	1	2	1
TCRH-1600-2HW-4R-DRC(E)	1505	122	1655	272	1340	1302	6	1	3	2
TCRH-2000-2HW-4R-DRC(E)	1935	122	2085	272	1770	1732	7	1-1/4	4	2

Note:
1. Right hand unit is shown.
2. Furnish access door to service fan motor.
3. Wiring works between motor and switch, and unit to power source by contractors.
4. Unit shall be mounted horizontally.
5. To prevent condensation, fan interlock valve shall be furnished so that water supply will be stopped when fan is off.

25
26

Ceiling Recessed,
High Static, Large Air Volume Model
6-Row Cooling/Heating

TCRH-2HW-6R-DRC -Z/P/PW/PC

TCRH-2HW-6R-DRE -Z/P/PW/PE

220V

Specification

Unit Size		600	1000	1200	1600	2000
Air Volume l/s	H	323	492	566	759	923
	M	306	470	554	732	886
	L	277	435	524	691	828
Cooling Capacity kW	SH	5.0	7.2	8.7	11.4	14.1
	TH	7.2	9.5	12.1	16.5	21.7
Heating Capacity kW		13.6	19.6	23.4	31.0	38.9
Water Flow l/s		0.35	0.46	0.58	0.79	1.04
W.P.D. kPa		13	4	8	16	33
Input Power W		226	326	363	517	619
Running Current A		1.03	1.50	1.68	2.36	2.89
Noise dB(A)	H	53.5	52.5	54.5	55.5	54.5
	M	52.5	52.0	54.0	54.5	53.5
	L	51.0	51.0	53.5	53.5	51.5
Weight kg (without plenum)		38	44	50	65	78
Weight kg (with plenum)		40	48	56	73	88
Holding Water Volume L		3.6	4.5	5.6	6.5	8.6
Casing		Galvanized Steel				
Fan		Galvanized sheet fabricated, Forward-Curved DIDW Fan				
Motor		3-Speed, PSC with Capacitor Cap and Flexible Conduit				
Power Source		AC220V, 50Hz, Single Phase				
Coil		Slit Surfaced, Aluminum Finned Coil complete with Female Sockets at Inlet/Outlet Conn. And Air Vent				
Operating Pressure		Max 1700kPa (250psig) unless otherwise specified				
Drain Pan		Stainless Steel, SUS430				

Note:
1. Cooling capacity is based on DB24°C, WB17.8°C, EWT7°C, LWT12°C.
2. Heating capacity is based on DB20°C, EWT60, same water flow as cooling.
3. Cooling/Heating Capacity, Input Power, Running Current are based on H speed.
4. Noise is measured at an anechoic chamber, 1m from the unit surface.
5. Running current may change according to the conditions.
6. Air volume is based on ESP 100Pa at H speed without plenum and filter.

Dimensions

Without Plenum TCRH-2HW-6R-DRC-Z TCRH-2HW-6R-DRE-Z TCRH-2HW-6R-DRC15-Z TCRH-2HW-6R-DRE15-Z

With Plenum TCRH-2HW-6R-DRC-P/PW/PC TCRH-2HW-6R-DRE-P/PW/PC TCRH-2HW-6R-DRC15-P/PW/PC TCRH-2HW-6R-DRE15-P/PW/PC

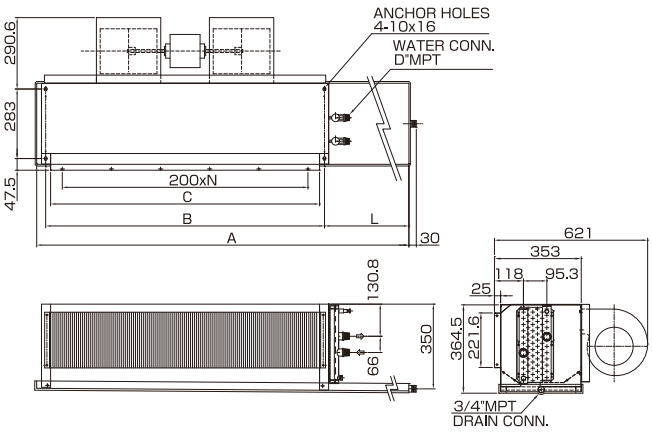

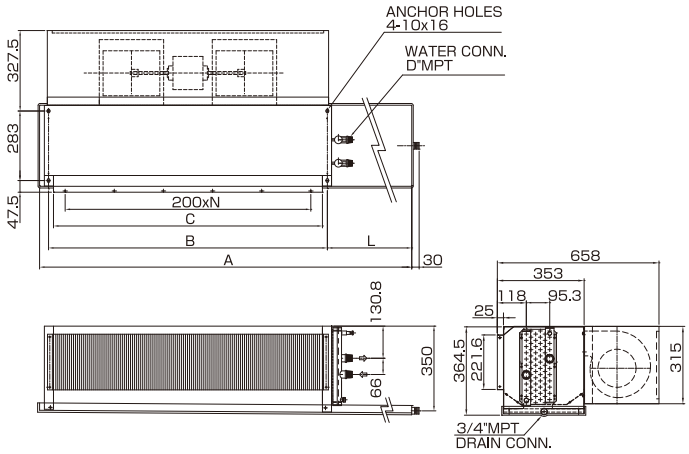

Unit Size	-Z/P/PW/PE/PC		15-Z/P/PW/PE/PC		B	C	N	D	NO. OF FAN	NO. OF MOTOR
	A	L	A	L						
TCRH- 600-2HW-6R-DRC(E)	906	191.4	1056	131.4	690	652	3	1	1	1
TCRH-1000-2HW-6R-DRC(E)	1050	122	1200	272	885	847	4	1	2	1
TCRH-1200-2HW-6R-DRC(E)	1335	157	1485	307	1135	1097	5	1	2	1
TCRH-1600-2HW-6R-DRC(E)	1505	122	1655	272	1340	1302	6	1	3	2
TCRH-2000-2HW-6R-DRC(E)	1935	122	2085	272	1770	1732	7	1-1/4	4	2

Note:
1. Right hand unit is shown.
2. Furnish access door to service fan motor.
3. Wiring works between motor and switch, and unit to power source by contractors.
4. Unit shall be mounted horizontally.
5. To prevent condensation, fan interlock valve shall be furnished so that water supply will be stopped when fan is off.

Ceiling Recessed,
High Static, Large Air Volume Model
3-Row Cooling,1-Row Heating

TCRH-2HW-DC2-DRC -Z/P/PW/PC

TCRH-2HW-DC2-DRE -Z/P/PW/PE

220V

Specification

Unit Size		600	1000	1200	1600	2000
Air Volume l/s	H	390	627	663	893	1079
	M	356	572	637	844	1041
	L	315	491	582	770	944
Cooling Capacity kW	SH	3.7	6.0	7.0	9.3	11.7
	TH	4.5	7.6	9.2	12.3	16.2
Heating Capacity kW		11.1	17.4	19.6	25.9	32.4
Water Flow l/s		0.22	0.37	0.44	0.59	0.78
W.P.D. kPa		3	9	16	31	65
Input Power W		262	396	409	571	677
Running Current A		1.18	1.82	1.89	2.64	3.12
Noise dB(A)	H	56.5	56.0	57.0	58.5	59.0
	M	55.0	54.5	56.5	57.5	58.0
	L	53.0	52.5	55.0	55.5	55.0
Weight kg (without plenum)		35	40	46	60	72
Weight kg (with plenum)		37	44	52	68	82
Holding Water Volume L		2.6	3.1	3.9	4.5	5.7
Casing		Galvanized Steel				
Fan		Galvanized sheet fabricated, Forward-Curved DIDW Fan				
Motor		3-Speed, PSC with Capacitor Cap and Flexible Conduit				
Power Source		AC220V, 50Hz, Single Phase				
Coil		Slit Surfaced, Aluminum Finned Coil complete with Female Sockets at Inlet/Outlet Conn. And Air Vent				
Operating Pressure		Max 1700kPa (250psig) unless otherwise specified				
Drain Pan		Stainless Steel, SUS430				

Note:
1. Cooling capacity is based on DB24°C, WB17.8°C, EWT7°C, LWT12°C.
2. Heating capacity is based on DB20°C, EWT60, same water flow as cooling.
3. Cooling/Heating Capacity, Input Power, Running Current are based on H speed.
4. Noise is measured at an anechoic chamber, 1m from the unit surface.
5. Running current may change according to the conditions.
6. Air volume is based on ESP 100Pa at H speed without plenum and filter.

Dimensions

Without Plenum TCRH-2HW-DC2-DRC-Z TCRH-2HW-DC2-DRE-Z TCRH-2HW-DC2-DRC15-Z TCRH-2HW-DC2-DRE15-Z

With Plenum TCRH-2HW-DC2-DRC-P/PW/PC TCRH-2HW-DC2-DRE-P/PW/PC TCRH-2HW-DC2-DRC15-P/PW/PC TCRH-2HW-DC2-DRE15-P/PW/PC

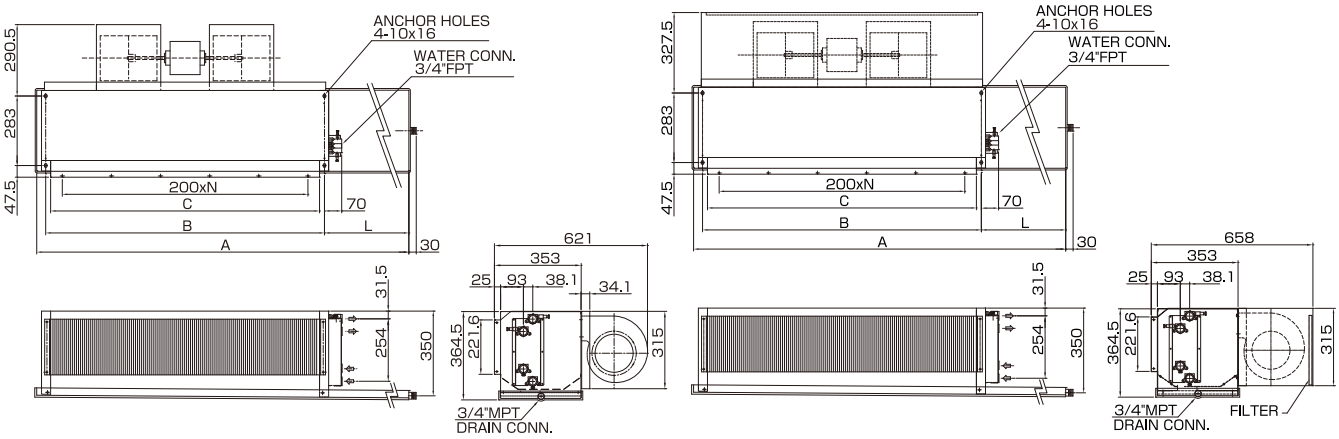

Unit Size	-Z/P/PW/PE/PC		15-Z/P/PW/PE/PC		B	C	N	D	NO. OF FAN	NO. OF MOTOR
	A	L	A	L						
TCRH- 600-2HW-DC2-DRC(E)	906	191.4	1056	131.4	690	652	3	1	1	1
TCRH-1000-2HW-DC2-DRC(E)	1050	122	1200	272	885	847	4	1	2	1
TCRH-1200-2HW-DC2-DRC(E)	1335	157	1485	307	1135	1097	5	1	2	1
TCRH-1600-2HW-DC2-DRC(E)	1505	122	1655	272	1340	1302	6	1	3	2
TCRH-2000-2HW-DC2-DRC(E)	1935	122	2085	272	1770	1732	7	1-1/4	4	2

Note:
1. Right hand unit is shown.
2. Furnish access door to service fan motor.
3. Wiring works between motor and switch, and unit to power source by contractors.
4. Unit shall be mounted horizontally.
5. To prevent condensation, fan interlock valve shall be furnished so that water supply will be stopped when fan is off.

◀ 27
28

Ceiling Recessed,
High Static, Large Air Volume Model
4-Row Cooling,1-Row Heating

TCRH-2HW-DC3-DRC -Z/P/PW/PC

TCRH-2HW-DC3-DRE -Z/P/PW/PE

220V

Specification

Unit Size		600	1000	1200	1600	2000
Air Volume l/s	H	353	549	610	819	993
	M	329	515	592	784	956
	L	296	463	552	729	883
Cooling Capacity kW	SH	4.5	6.8	7.5	10.1	12.6
	TH	6.2	10.1	10.1	14.2	18.9
Heating Capacity kW		13.1	20.5	22.3	29.7	37.1
Water Flow l/s		0.3	0.49	0.49	0.68	0.91
W.P.D. kPa		7	19	4	8	17
Input Power W		243	357	384	542	645
Running Current A		1.10	1.64	1.78	2.49	2.99
Noise dB(A)	H	55.0	54.0	56.0	57.0	56.5
	M	54.0	53.5	55.5	56.0	55.5
	L	52.5	52.0	54.5	55.0	53.5
Weight kg (without plenum)		37	42	48	63	75
Weight kg (with plenum)		39	46	54	71	85
Holding Water Volume L		3.3	4.0	4.9	5.7	7.2
Casing		Galvanized Steel				
Fan		Galvanized sheet fabricated, Forward-Curved DIDW Fan				
Motor		3-Speed, PSC with Capacitor Cap and Flexible Conduit				
Power Source		AC220V, 50Hz, Single Phase				
Coil		Slit Surfaced, Aluminum Finned Coil complete with Female Sockets at Inlet/Outlet Conn. And Air Vent				
Operating Pressure		Max 1700kPa (250psig) unless otherwise specified				
Drain Pan		Stainless Steel, SUS430				

Note:
1. Cooling capacity is based on DB24°C, WB17.8°C, EWT7°C, LWT12°C.
2. Heating capacity is based on DB20°C, EWT60, same water flow as cooling.
3. Cooling/Heating Capacity, Input Power, Running Current are based on H speed.
4. Noise is measured at an anechoic chamber, 1m from the unit surface.
5. Running current may change according to the conditions.
6. Air volume is based on ESP 100Pa at H speed without plenum and filter.

Dimensions

Without Plenum TCRH-2HW-DC3-DRC-Z TCRH-2HW-DC3-DRE-Z TCRH-2HW-DC3-DRC15-Z TCRH-2HW-DC3-DRE15-Z

With Plenum TCRH-2HW-DC3-DRC-P/PW/PC TCRH-2HW-DC3-DRE-P/PW/PC TCRH-2HW-DC3-DRC15-P/PW/PC TCRH-2HW-DC3-DRE15-P/PW/PC

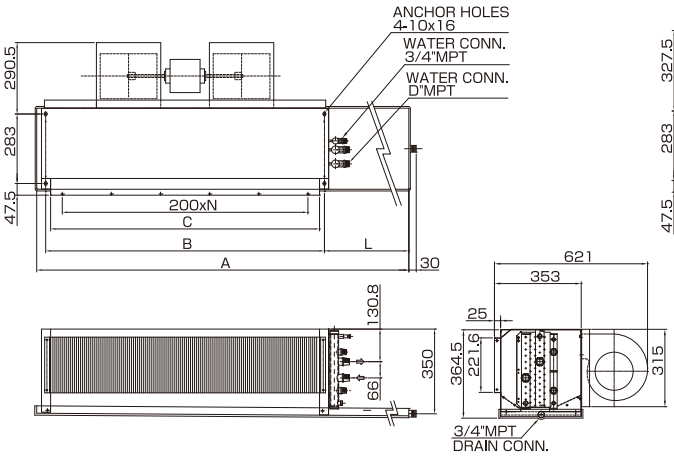

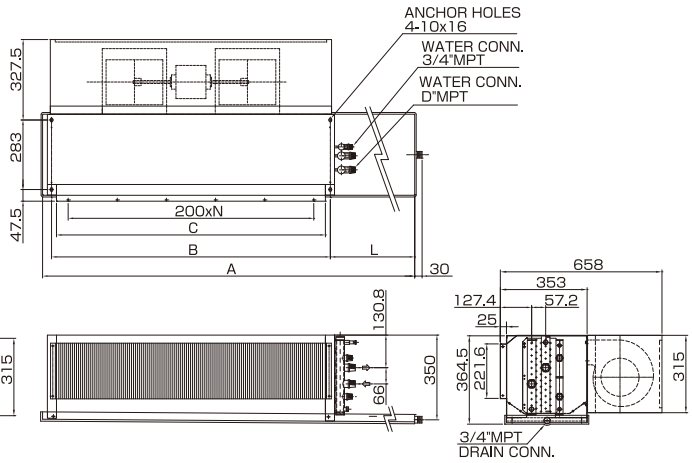

Unit Size	-Z/P/PW/PE/PC		15-Z/P/PW/PE/PC		B	C	N	D	NO. OF FAN	NO. OF MOTOR
	A	L	A	L						
TCRH- 600-2HW-DC3-DRC(E)	906	191.4	1056	131.4	690	652	3	1	1	1
TCRH-1000-2HW-DC3-DRC(E)	1050	122	1200	272	885	847	4	1	2	1
TCRH-1200-2HW-DC3-DRC(E)	1335	157	1485	307	1135	1097	5	1	2	1
TCRH-1600-2HW-DC3-DRC(E)	1505	122	1655	272	1340	1302	6	1	3	2
TCRH-2000-2HW-DC3-DRC(E)	1935	122	2085	272	1770	1732	7	1-1/4	4	2

Note:
1. Right hand unit is shown.
2. Furnish access door to service fan motor.
3. Wiring works between motor and switch, and unit to power source by contractors.
4. Unit shall be mounted horizontally.
5. To prevent condensation, fan interlock valve shall be furnished so that water supply will be stopped when fan is off.

Ceiling Recessed,
High Static, Large Air Volume Model
4-Row Cooling,2-Row Heating

TCRH-2HW-DC4-DRC -Z/P/PW/PC

TCRH-2HW-DC4-DRE -Z/P/PW/PE

220V

Specification

Unit Size		600	1000	1200	1600	2000
Air Volume l/s	H	323	492	566	759	923
	M	306	470	554	732	886
	L	277	435	524	691	828
Cooling Capacity kW	SH	4.1	6.3	7.0	9.5	11.9
	TH	5.8	9.2	9.5	13.3	17.8
Heating Capacity kW		11.2	16.9	19.5	25.9	32.5
Water Flow l/s		0.28	0.45	0.46	0.64	0.86
W.P.D. kPa		6	16	4	8	16
Input Power W		226	326	363	517	619
Running Current A		1.03	1.50	1.68	2.36	2.89
Noise dB(A)	H	53.5	52.5	54.5	55.5	54.5
	M	52.5	52.0	54.0	54.5	53.5
	L	51.0	51.0	53.5	53.5	51.5
Weight kg (without plenum)		38	44	50	65	78
Weight kg (with plenum)		40	48	56	73	88
Holding Water Volume L		3.6	4.5	5.6	6.5	8.6
Casing		Galvanized Steel				
Fan		Galvanized sheet fabricated, Forward-Curved DIDW Fan				
Motor		3-Speed, PSC with Capacitor Cap and Flexible Conduit				
Power Source		AC220V, 50Hz, Single Phase				
Coil		Slit Surfaced, Aluminum Finned Coil complete with Female Sockets at Inlet/Outlet Conn. And Air Vent				
Operating Pressure		Max 1700kPa (250psig) unless otherwise specified				
Drain Pan		Stainless Steel, SUS430				

Note:
1. Cooling capacity is based on DB24°C, WB17.8°C, EWT7°C, LWT12°C.
2. Heating capacity is based on DB20°C, EWT60, same water flow as cooling.
3. Cooling/Heating Capacity, Input Power, Running Current are based on H speed.
4. Noise is measured at an anechoic chamber, 1m from the unit surface.
5. Running current may change according to the conditions.
6. Air volume is based on ESP 100Pa at H speed without plenum and filter.

Dimensions

Without Plenum TCRH-2HW-DC4-DRC-Z TCRH-2HW-DC4-DRE-Z TCRH-2HW-DC4-DRC15-Z TCRH-2HW-DC4-DRE15-Z

With Plenum TCRH-2HW-DC4-DRC-P/PW/PC TCRH-2HW-DC4-DRE-P/PW/PC TCRH-2HW-DC4-DRC15-P/PW/PC TCRH-2HW-DC4-DRE15-P/PW/PC

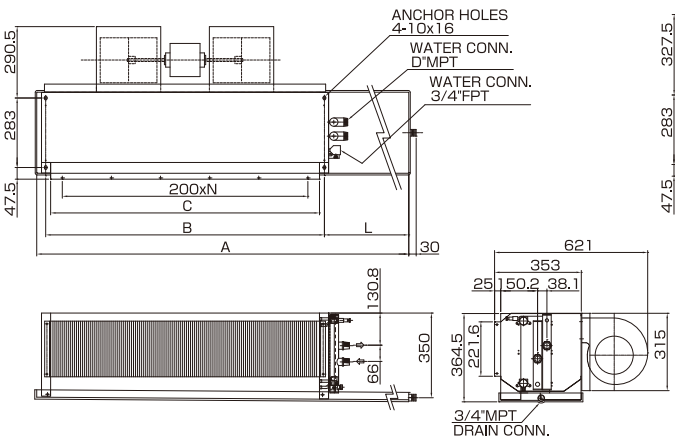

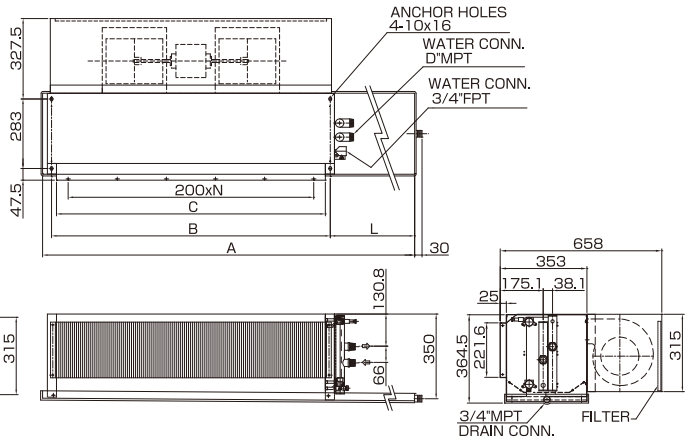

Unit Size	-Z/P/PW/PE/PC		15-Z/P/PW/PE/PC		B	C	N	D	NO. OF FAN	NO. OF MOTOR
	A	L	A	L						
TCRH- 600-2HW-DC4-DRC(E)	906	191.4	1056	131.4	690	652	3	1	1	1
TCRH-1000-2HW-DC4-DRC(E)	1050	122	1200	272	885	847	4	1	2	1
TCRH-1200-2HW-DC4-DRC(E)	1335	157	1485	307	1135	1097	5	1	2	1
TCRH-1600-2HW-DC4-DRC(E)	1505	122	1655	272	1340	1302	6	1	3	2
TCRH-2000-2HW-DC4-DRC(E)	1935	122	2085	272	1770	1732	7	1-1/4	4	2

Note:
1. Right hand unit is shown.
2. Furnish access door to service fan motor.
3. Wiring works between motor and switch, and unit to power source by contractors.
4. Unit shall be mounted horizontally.
5. To prevent condensation, fan interlock valve shall be furnished so that water supply will be stopped when fan is off.

◀ 29
30
31 ▶

Ceiling Recessed,
High Static, Large Air Volume Model
6-Row, High Temperature Rise

TCRH-2HW-HT-DRC -Z/P/PW/PC

TCRH-2HW-HT-DRE -Z/P/PW/PE

220V

Specification

Unit Size		600	1000	1200	1600	2000
Air Volume l/s	H	323	492	566	759	923
	M	306	470	554	732	886
	L	277	435	524	691	828
Cooling Capacity kW	SH	4.6	6.8	7.8	10.3	12.8
	TH	6.5	10.1	10.8	14.8	19.5
Heating Capacity kW		12.7	19.2	21.9	29.0	36.7
Water Flow l/s		0.18	0.27	0.29	0.4	0.52
W.P.D. kPa		24	68	15	30	65
Input Power W		226	326	363	517	619
Running Current A		1.03	1.50	1.68	2.36	2.89
Noise dB(A)	H	53.5	52.5	54.5	55.5	54.5
	M	52.5	52.0	54.0	54.5	53.5
	L	51.0	51.0	53.5	53.5	51.5
Weight kg (without plenum)		38	44	50	65	78
Weight kg (with plenum)		40	48	56	73	88
Holding Water Volume L		3.6	4.5	5.6	6.5	8.6
Casing		Galvanized Steel				
Fan		Galvanized sheet fabricated, Forward-Curved DIDW Fan				
Motor		3-Speed, PSC with Capacitor Cap and Flexible Conduit				
Power Source		AC220V, 50Hz, Single Phase				
Coil		Slit Surfaced, Aluminum Finned Coil complete with Female Sockets at Inlet/Outlet Conn. And Air Vent				
Operating Pressure		Max 1700kPa (250psig) unless otherwise specified				
Drain Pan		Stainless Steel, SUS430				

Note:
1. Cooling capacity is based on DB24°C, WB17.8°C, EWT7°C, LWT16°C.
2. Heating capacity is based on DB20°C, EWT60, same water flow as cooling.
3. Cooling/Heating Capacity, Input Power, Running Current are based on H speed.
4. Noise is measured at an anechoic chamber, 1m from the unit surface.
5. Running current may change according to the conditions.
6. Air volume is based on ESP 100Pa at H speed without plenum and filter.

Dimensions

Without Plenum TCRH-2HW-HT-DRC-Z TCRH-2HW-HT-DRE-Z TCRH-2HW-HT-DRC15-Z TCRH-2HW-HT-DRE15-Z

With Plenum TCRH-2HW-HT-DRC-P/PW/PC TCRH-2HW-HT-DRE-P/PW/PC TCRH-2HW-HT-DRC15-P/PW/PC TCRH-2HW-HT-DRE15-P/PW/PC

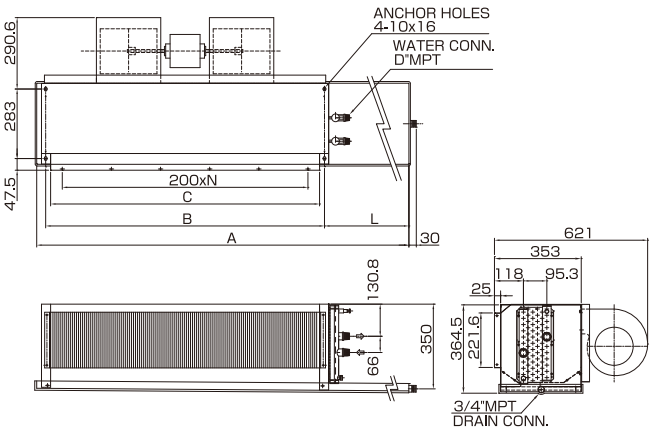

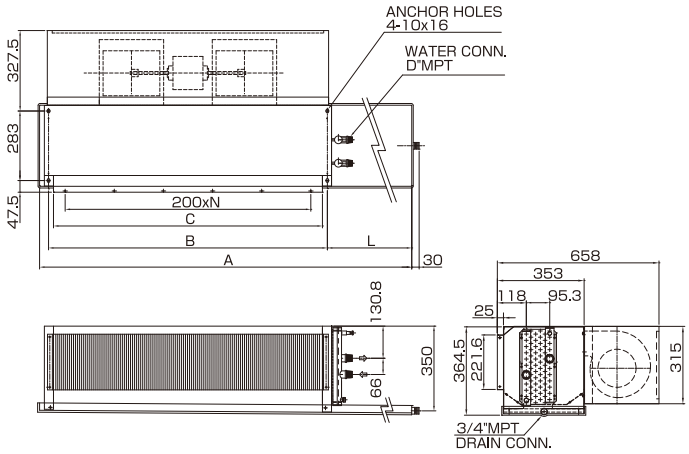

Unit Size	-Z/P/PW/PE/PC		15-Z/P/PW/PE/PC		B	C	N	D	NO. OF FAN	NO. OF MOTOR
	A	L	A	L						
TCRH- 600-2HW-HT-DRC(E)	906	191.4	1056	131.4	690	652	3	1	1	1
TCRH-1000-2HW-HT-DRC(E)	1050	122	1200	272	885	847	4	1	2	1
TCRH-1200-2HW-HT-DRC(E)	1335	157	1485	307	1135	1097	5	1	2	1
TCRH-1600-2HW-HT-DRC(E)	1505	122	1655	272	1340	1302	6	1	3	2
TCRH-2000-2HW-HT-DRC(E)	1935	122	2085	272	1770	1732	7	1-1/4	4	2

Note:
1. Right hand unit is shown.
2. Furnish access door to service fan motor.
3. Wiring works between motor and switch, and unit to power source by contractors.
4. Unit shall be mounted horizontally.
5. To prevent condensation, fan interlock valve shall be furnished so that water supply will be stopped when fan is off.

FAN COIL UNIT 220V

(Coil Performance/Derating Factors/Noise Level)

Coil Performance(Cooling/Heating)

Ceiling Recessed Model ..... Standard Model ..... SRC-2SW ..... 33~37

SRC

High Static Model ..... SRC-2HW ..... 38~42

Large Air Volume Model ..... SRC-2SH ..... 43~47

Ceiling Recessed, High Static Model ..... High Static, Large Air Volume Model ..... TCRH-2HW ..... 48~53

TCRH

Derating Factors by ESP

Ceiling Recessed Model ..... Standard Model ..... SRC-2SW ..... 54~58

SRC

High Static Model ..... SRC-2HW ..... 59~63

Large Air Volume Model ..... SRC-2SH ..... 64~68

Ceiling Recessed, High Static Model ..... High Static, Large Air Volume Model ..... TCRH-2HW ..... 69~74

TCRH

Noise Level

Ceiling Recessed Model ..... Standard Model SRC-2SW 75

SRC

High Static Model SRC-2HW 76

Large Air Volume Model SRC-2SH 77

Ceiling Recessed, High Static Model ..... High Static, Large Air Volume Model ..... TCRH-2HW ..... 78~79

TCRH

Ceiling Recessed Model-Standard Model 3-Row Cooling/Heating

SRC-2SW-3R 220V

COOLING Capacity

Unit Size	Water Flow (l/sec)	W.P.D (kPa)	Entering Air Condition DB=24.0°C WB=17.8°C (55%)									Entering Air Condition DB=26.0°C WB=19.5°C (55%)								
			Entering Water Temperature									Entering Water Temperature								
			5°C			7°C			9°C			5°C			7°C			9°C		
			SH (kW)	TH (kW)	ΔWT (°C)	SH (kW)	TH (kW)	ΔWT (°C)	SH (kW)	TH (kW)	ΔWT (°C)	SH (kW)	TH (kW)	ΔWT (°C)	SH (kW)	TH (kW)	ΔWT (°C)	SH (kW)	TH (kW)	ΔWT (°C)
300	0.05	0.8	1.21	1.46	7.0	1.10	1.29	6.2	1.00	1.12	5.4	1.29	1.66	7.9	1.18	1.49	7.1	1.07	1.31	6.3
	0.10	2.8	1.59	2.04	4.9	1.44	1.80	4.3	1.29	1.55	3.7	1.71	2.34	5.6	1.56	2.09	5.0	1.41	1.84	4.4
	0.15	5.6	1.75	2.35	3.7	1.58	2.07	3.3	1.42	1.77	2.8	1.90	2.70	4.3	1.73	2.41	3.9	1.56	2.12	3.4
	0.20	9.2	1.84	2.54	3.0	1.67	2.24	2.7	1.49	1.92	2.3	2.00	2.93	3.5	1.82	2.62	3.1	1.64	2.30	2.7
400	0.10	3.9	2.17	2.82	6.8	1.97	2.49	6.0	1.78	2.14	5.1	2.34	3.22	7.7	2.13	2.89	6.9	1.93	2.54	6.1
	0.15	8.0	2.42	3.28	5.2	2.19	2.88	4.6	1.97	2.48	4.0	2.61	3.75	6.0	2.38	3.36	5.4	2.15	2.95	4.7
	0.20	13.1	2.56	3.57	4.3	2.31	3.14	3.8	2.08	2.69	3.2	2.77	4.10	4.9	2.52	3.67	4.4	2.28	3.22	3.9
	0.25	19.3	2.65	3.78	3.6	2.39	3.32	3.2	2.15	2.84	2.7	2.87	4.34	4.2	2.61	3.89	3.7	2.36	3.41	3.3
600	0.10	4.6	2.73	3.49	8.4	2.48	3.08	7.4	2.24	2.66	6.4	2.94	3.98	9.5	2.68	3.57	8.5	2.43	3.15	7.5
	0.15	9.3	3.11	4.13	6.6	2.81	3.64	5.8	2.54	3.13	5.0	3.35	4.73	7.5	3.05	4.24	6.8	2.77	3.73	5.9
	0.20	15.2	3.33	4.56	5.4	3.01	4.01	4.8	2.71	3.44	4.1	3.60	5.22	6.2	3.27	4.68	5.6	2.96	4.11	4.9
	0.30	30.7	3.57	5.10	4.1	3.22	4.48	3.6	2.89	3.84	3.1	3.87	5.86	4.7	3.52	5.25	4.2	3.18	4.60	3.7
800	0.15	12.0	3.62	4.88	7.8	3.27	4.30	6.9	2.95	3.70	5.9	3.90	5.58	8.9	3.55	5.00	8.0	3.22	4.40	7.0
	0.20	19.7	3.89	5.40	6.5	3.51	4.75	5.7	3.16	4.08	4.9	4.20	6.19	7.4	3.82	5.55	6.6	3.46	4.87	5.8
	0.25	29.0	4.06	5.78	5.5	3.67	5.08	4.9	3.29	4.35	4.2	4.40	6.64	6.3	4.00	5.94	5.7	3.62	5.21	5.0
	0.30	39.7	4.19	6.07	4.8	3.78	5.34	4.3	3.39	4.57	3.6	4.54	6.99	5.6	4.13	6.25	5.0	3.73	5.48	4.4
1000	0.20	3.4	4.53	5.75	6.9	4.10	5.08	6.1	3.71	4.38	5.2	4.87	6.56	7.8	4.44	5.89	7.0	4.02	5.18	6.2
	0.30	6.9	5.10	6.74	5.4	4.62	5.94	4.7	4.16	5.11	4.1	5.50	7.72	6.2	5.01	6.92	5.5	4.54	6.08	4.8
	0.40	11.3	5.43	7.39	4.4	4.91	6.50	3.9	4.42	5.58	3.3	5.87	8.48	5.1	5.34	7.59	4.5	4.83	6.67	4.0
	0.50	16.6	5.64	7.85	3.8	5.10	6.91	3.3	4.58	5.92	2.8	6.11	9.03	4.3	5.56	8.08	3.9	5.02	7.09	3.4
1200	0.20	4.0	5.30	6.71	8.0	4.81	5.93	7.1	4.35	5.12	6.1	5.69	7.65	9.1	5.19	6.86	8.2	4.71	6.05	7.2
	0.30	8.1	6.03	7.94	6.3	5.46	7.00	5.6	4.92	6.03	4.8	6.50	9.09	7.2	5.92	8.14	6.5	5.36	7.16	5.7
	0.40	13.2	6.46	8.76	5.2	5.84	7.71	4.6	5.26	6.62	4.0	6.98	10.04	6.0	6.35	8.99	5.4	5.75	7.90	4.7
	0.50	19.5	6.74	9.34	4.5	6.09	8.22	3.9	5.47	7.05	3.4	7.29	10.73	5.1	6.63	9.61	4.6	6.00	8.43	4.0
1400	0.20	4.4	5.76	7.30	8.7	5.23	6.45	7.7	4.73	5.57	6.7	6.18	8.32	9.9	5.64	7.46	8.9	5.12	6.58	7.9
	0.30	8.9	6.59	8.68	6.9	5.97	7.66	6.1	5.39	6.59	5.3	7.09	9.93	7.9	6.46	8.90	7.1	5.86	7.83	6.2
	0.40	14.7	7.08	9.60	5.7	6.40	8.46	5.1	5.77	7.27	4.3	7.64	11.00	6.6	6.96	9.85	5.9	6.30	8.66	5.2
	0.55	25.4	7.52	10.54	4.6	6.80	9.27	4.0	6.11	7.95	3.5	8.13	12.10	5.3	7.40	10.84	4.7	6.69	9.51	4.1

HEATING Capacity

Unit Size	Water Flow (l/sec)	W.P.D (kPa)	Entering Air Condition DB=20.0°C										Entering Air Condition DB=22.0°C									
			Entering Water Temperature										Entering Water Temperature									
			40°C		50°C		60°C		70°C		80°C		40°C		50°C		60°C		70°C		80°C	
			TH (kW)	ΔWT (°C)	TH (kW)	ΔWT (°C)	TH (kW)	ΔWT (°C)	TH (kW)	ΔWT (°C)	TH (kW)	ΔWT (°C)	TH (kW)	ΔWT (°C)	TH (kW)	ΔWT (°C)	TH (kW)	ΔWT (°C)	TH (kW)	ΔWT (°C)	TH (kW)	ΔWT (°C)
300	0.05	0.8	1.84	8.8	2.76	13.2	3.68	17.6	4.61	22.0	5.53	26.4	1.66	7.9	2.58	12.3	3.50	16.7	4.42	21.2	5.34	25.6
	0.10	2.8	2.09	5.0	3.13	7.5	4.18	10.0	5.23	12.5	6.27	15.0	1.88	4.5	2.92	7.0	3.97	9.5	5.02	12.0	6.06	14.5
	0.15	5.6	2.19	3.5	3.29	5.2	4.39	7.0	5.49	8.7	6.58	10.5	1.97	3.1	3.07	4.9	4.17	6.6	5.27	8.4	6.36	10.1
	0.20	9.2	2.25	2.7	3.38	4.0	4.51	5.4	5.63	6.7	6.76	8.1	2.02	2.4	3.15	3.8	4.28	5.1	5.41	6.5	6.53	7.8
400	0.10	3.9	2.86	6.8	4.29	10.3	5.73	13.7	7.16	17.1	8.59	20.5	2.57	6.2	4.01	9.6	5.44	13.0	6.87	16.4	8.30	19.8
	0.15	8.0	3.05	4.9	4.58	7.3	6.10	9.7	7.63	12.2	9.16	14.6	2.74	4.4	4.27	6.8	5.80	9.2	7.33	11.7	8.85	14.1
	0.20	13.1	3.16	3.8	4.74	5.7	6.32	7.6	7.90	9.4	9.48	11.3	2.84	3.4	4.42	5.3	6.00	7.2	7.59	9.1	9.17	11.0
	0.25	19.3	3.23	3.1	4.85	4.6	6.46	6.2	8.08	7.7	9.70	9.3	2.91	2.8	4.52	4.3	6.14	5.9	7.76	7.4	9.37	9.0
600	0.10	4.6	3.62	8.7	5.44	13.0	7.25	17.3	9.06	21.7	10.88	26.0	3.26	7.8	5.07	12.1	6.89	16.5	8.70	20.8	10.51	25.1
	0.15	9.3	3.93	6.3	5.89	9.4	7.86	12.5	9.83	15.7	11.79	18.8	3.53	5.6	5.50	8.8	7.47	11.9	9.43	15.0	11.40	18.2
	0.20	15.2	4.11	4.9	6.16	7.4	8.22	9.8	10.27	12.3	12.33	14.7	3.70	4.4	5.75	6.9	7.81	9.3	9.86	11.8	11.92	14.2
	0.30	30.7	4.31	3.4	6.47	5.2	8.62	6.9	10.78	8.6	12.94	10.3	3.88	3.1	6.04	4.8	8.19	6.5	10.35	8.2	12.51	10.0
800	0.15	12.0	4.54	7.2	6.81	10.9	9.09	14.5	11.36	18.1	13.63	21.7	4.09	6.5	6.36	10.1	8.63	13.8	10.91	17.4	13.18	21.0
	0.20	19.7	4.77	5.7	7.16	8.6	9.55	11.4	11.94	14.3	14.33	17.1	4.30	5.1	6.69	8.0	9.08	10.8	11.47	13.7	13.86	16.6
	0.25	29.0	4.93	4.7	7.40	7.1	9.87	9.4	12.33	11.8	14.80	14.1	4.44	4.2	6.90	6.6	9.37	9.0	11.84	11.3	14.31	13.7
	0.30	39.7	5.04	4.0	7.57	6.0	10.09	8.0	12.61	10.0	15.14	12.1	4.54	3.6	7.06	5.6	9.58	7.6	12.11	9.6	14.63	11.7
1000	0.20	3.4	6.01	7.2	9.01	10.8	12.02	14.4	15.02	17.9	18.03	21.5	5.40	6.5	8.41	10.1	11.42	13.6	14.42	17.2	17.43	20.8
	0.30	6.9	6.43	5.1	9.65	7.7	12.86	10.2	16.08	12.8	19.30	15.4	5.79	4.6	9.00	7.2	12.22	9.7	15.44	12.3	18.65	14.9
	0.40	11.3	6.67	4.0	10.01	6.0	13.35	8.0	16.69	10.0	20.03	12.0	6.00	3.6	9.34	5.6	12.68	7.6	16.02	9.6	19.36	11.6
	0.50	16.6	6.83	3.3	10.25	4.9	13.67	6.5	17.09	8.2	20.51	9.8	6.15	2.9	9.57	4.6	12.99	6.2	16.41	7.8	19.83	9.5
1200	0.20	4.0	7.05	8.4	10.57	12.6	14.10	16.8	17.62	21.1	21.15	25.3	6.34	7.6	9.87	11.8	13.39	16.0	16.92	20.2	20.44	24.4
	0.30	8.1	7.63	6.1	11.44	9.1	15.26	12.2	19.07	15.2	22.88	18.2	6.86	5.5	10.68	8.5	14.49	11.5	18.31	14.6	22.12	17.6
	0.40	13.2	7.96	4.8	11.95	7.1	15.93	9.5	19.92	11.9	23.90	14.3	7.17	4.3	11.15	6.7	15.14	9.0	19.12	11.4	23.10	13.8
	0.50	19.5	8.19	3.9	12.29	5.9	16.38	7.8	20.48	9.8	24.58	11.7	7.37	3.5	11.47	5.5	15.56	7.4	19.66	9.4	23.76	11.4
1400	0.20	4.4	7.67	9.2	11.50	13.7	15.34	18.3	19.18	22.9	23.01	27.5	6.90	8.2	10.74	12.8	14.57	17.4	18.41	22.0	22.25	26.6
	0.30	8.9	8.35	6.7	12.53	10.0	16.71	13.3	20.89	16.6	25.07	20.0	7.52	6.0	11.70	9.3	15.88	12.6	20.06	16.0	24.24	19.3
	0.40	14.7	8.76	5.2	13.14	7.8	17.52	10.5	21.90	13.1	26.28	15.7	7.88	4.7	12.26	7.3	16.64	9.9	21.02	12.6	25.41	15.2
	0.55	25.4	9.13	4.0	13.70	6.0	18.27	7.9	22.83	9.9	27.40	11.9	8.22	3.6	12.79	5.6	17.35	7.5	21.92	9.5	26.49	11.5

Note:To obtain accurate air volume and cooling/heating capacities,refer to pages 54-74

Ceiling Recessed Model-Standard Model 4-Row Cooling/Heating

SRC-2SW-4R 220V

COOLING Capacity

Unit Size	Water Flow (l/sec)	W.P.D (kPa)	Entering Air Condition DB=24.0°C WB=17.8°C (55%)									Entering Air Condition DB=26.0°C WB=19.5°C (55%)								
			Entering Water Temperature									Entering Water Temperature								
			5°C			7°C			9°C			5°C			7°C			9°C		
			SH (kW)	TH (kW)	ΔWT (°C)	SH (kW)	TH (kW)	ΔWT (°C)	SH (kW)	TH (kW)	ΔWT (°C)	SH (kW)	TH (kW)	ΔWT (°C)	SH (kW)	TH (kW)	ΔWT (°C)	SH (kW)	TH (kW)	ΔWT (°C)
300	0.05	0.5	1.21	1.51	7.2	1.10	1.33	6.4	1.00	1.15	5.5	1.30	1.72	8.2	1.19	1.54	7.4	1.08	1.36	6.5
	0.10	1.7	1.62	2.15	5.1	1.47	1.89	4.5	1.32	1.63	3.9	1.75	2.46	5.9	1.59	2.21	5.3	1.44	1.94	4.6
	0.15	3.4	1.80	2.49	4.0	1.63	2.19	3.5	1.46	1.88	3.0	1.95	2.86	4.6	1.78	2.56	4.1	1.61	2.25	3.6
	0.20	5.6	1.90	2.71	3.2	1.72	2.38	2.8	1.54	2.04	2.4	2.06	3.12	3.7	1.88	2.79	3.3	1.69	2.45	2.9
400	0.10	2.4	2.18	2.93	7.0	1.98	2.58	6.2	1.78	2.22	5.3	2.35	3.35	8.0	2.14	3.00	7.2	1.94	2.64	6.3
	0.15	4.8	2.44	3.41	5.4	2.21	3.00	4.8	1.98	2.58	4.1	2.64	3.91	6.2	2.40	3.51	5.6	2.17	3.08	4.9
	0.20	8.0	2.58	3.73	4.5	2.33	3.28	3.9	2.10	2.81	3.4	2.80	4.28	5.1	2.54	3.83	4.6	2.30	3.36	4.0
	0.25	11.7	2.67	3.95	3.8	2.41	3.47	3.3	2.16	2.97	2.8	2.90	4.55	4.4	2.63	4.07	3.9	2.38	3.57	3.4
600	0.10	2.8	2.79	3.66	8.8	2.52	3.23	7.7	2.28	2.79	6.7	2.99	4.18	10.0	2.73	3.75	9.0	2.48	3.30	7.9
	0.15	5.6	3.19	4.37	7.0	2.89	3.85	6.1	2.60	3.31	5.3	3.44	5.01	8.0	3.13	4.49	7.2	2.84	3.94	6.3
	0.20	9.3	3.43	4.85	5.8	3.10	4.26	5.1	2.79	3.65	4.4	3.71	5.56	6.6	3.38	4.98	6.0	3.05	4.37	5.2
	0.30	18.7	3.70	5.45	4.3	3.34	4.79	3.8	2.99	4.10	3.3	4.01	6.28	5.0	3.64	5.62	4.5	3.29	4.92	3.9
800	0.15	7.3	3.72	5.17	8.2	3.37	4.55	7.3	3.03	3.91	6.2	4.01	5.92	9.4	3.65	5.30	8.5	3.31	4.66	7.4
	0.20	12.0	4.02	5.75	6.9	3.63	5.06	6.0	3.26	4.34	5.2	4.34	6.60	7.9	3.95	5.91	7.1	3.57	5.19	6.2
	0.25	17.6	4.21	6.18	5.9	3.80	5.43	5.2	3.41	4.65	4.4	4.56	7.10	6.8	4.15	6.36	6.1	3.75	5.57	5.3
	0.30	24.1	4.35	6.51	5.2	3.92	5.72	4.6	3.51	4.89	3.9	4.71	7.49	6.0	4.29	6.70	5.3	3.87	5.88	4.7
1000	0.20	2.1	4.63	6.06	7.2	4.20	5.34	6.4	3.79	4.60	5.5	4.99	6.92	8.3	4.54	6.20	7.4	4.12	5.46	6.5
	0.30	4.2	5.26	7.17	5.7	4.76	6.31	5.0	4.28	5.42	4.3	5.68	8.22	6.5	5.17	7.36	5.9	4.68	6.46	5.2
	0.40	6.9	5.63	7.89	4.7	5.08	6.94	4.1	4.57	5.95	3.6	6.09	9.07	5.4	5.54	8.12	4.9	5.01	7.12	4.3
	0.50	10.1	5.86	8.42	4.0	5.29	7.40	3.5	4.74	6.33	3.0	6.35	9.68	4.6	5.77	8.67	4.1	5.22	7.60	3.6
1200	0.20	2.4	5.54	7.19	8.6	5.03	6.35	7.6	4.55	5.48	6.5	5.95	8.20	9.8	5.43	7.36	8.8	4.93	6.48	7.7
	0.30	4.9	6.39	8.63	6.9	5.78	7.60	6.1	5.21	6.54	5.2	6.88	9.87	7.9	6.27	8.85	7.0	5.68	7.78	6.2
	0.40	8.1	6.88	9.58	5.7	6.23	8.43	5.0	5.60	7.24	4.3	7.44	10.99	6.6	6.77	9.84	5.9	6.13	8.64	5.2
	0.50	11.8	7.21	10.27	4.9	6.52	9.04	4.3	5.85	7.74	3.7	7.80	11.80	5.6	7.10	10.57	5.1	6.42	9.27	4.4
1400	0.20	2.7	5.91	7.70	9.2	5.36	6.79	8.1	4.85	5.86	7.0	6.34	8.77	10.5	5.78	7.87	9.4	5.25	6.93	8.3
	0.30	5.4	6.82	9.24	7.4	6.17	8.15	6.5	5.56	7.01	5.6	7.34	10.58	8.4	6.69	9.48	7.6	6.06	8.34	6.6
	0.40	8.9	7.36	10.28	6.1	6.65	9.05	5.4	5.99	7.77	4.6	7.94	11.79	7.0	7.23	10.56	6.3	6.55	9.28	5.5
	0.55	15.5	7.85	11.35	4.9	7.09	9.98	4.3	6.37	8.55	3.7	8.49	13.04	5.7	7.73	11.68	5.1	6.99	10.24	4.5

◀33·34

HEATING Capacity

Unit Size	Water Flow (l/sec)	W.P.D (kPa)	Entering Air Condition DB=20.0°C										Entering Air Condition DB=22.0°C									
			Entering Water Temperature										Entering Water Temperature									
			40°C		50°C		60°C		70°C		80°C		40°C		50°C		60°C		70°C		80°C	
			TH (kW)	ΔWT (°C)	TH (kW)	ΔWT (°C)	TH (kW)	ΔWT (°C)	TH (kW)	ΔWT (°C)	TH (kW)	ΔWT (°C)	TH (kW)	ΔWT (°C)	TH (kW)	ΔWT (°C)	TH (kW)	ΔWT (°C)	TH (kW)	ΔWT (°C)	TH (kW)	ΔWT (°C)
300	0.05	0.5	1.93	9.2	2.89	13.9	3.86	18.5	4.83	23.1	5.79	27.7	1.73	8.3	2.70	12.9	3.67	17.5	4.63	22.2	5.60	26.8
	0.10	1.7	2.19	5.3	3.29	7.9	4.39	10.5	5.49	13.1	6.59	15.8	1.97	4.7	3.07	7.4	4.17	10.0	5.27	12.6	6.37	15.2
	0.15	3.4	2.30	3.7	3.46	5.5	4.61	7.4	5.77	9.2	6.92	11.0	2.07	3.3	3.23	5.1	4.38	7.0	5.54	8.8	6.69	10.7
	0.20	5.6	2.37	2.8	3.55	4.2	4.74	5.7	5.92	7.1	7.11	8.5	2.13	2.5	3.31	4.0	4.50	5.4	5.68	6.8	6.87	8.2
400	0.10	2.4	2.94	7.0	4.42	10.6	5.89	14.1	7.37	17.6	8.84	21.1	2.65	6.3	4.12	9.9	5.60	13.4	7.07	16.9	8.55	20.4
	0.15	4.8	3.14	5.0	4.71	7.5	6.28	10.0	7.85	12.5	9.42	15.0	2.82	4.5	4.39	7.0	5.97	9.5	7.54	12.0	9.11	14.5
	0.20	8.0	3.25	3.9	4.87	5.8	6.50	7.8	8.13	9.7	9.75	11.7	2.92	3.5	4.55	5.4	6.18	7.4	7.80	9.3	9.43	11.3
	0.25	11.7	3.32	3.2	4.98	4.8	6.64	6.4	8.30	7.9	9.97	9.5	2.99	2.9	4.65	4.4	6.31	6.0	7.97	7.6	9.63	9.2
600	0.10	2.8	3.80	9.1	5.71	13.6	7.61	18.2	9.51	22.7	11.42	27.3	3.42	8.2	5.32	12.7	7.23	17.3	9.13	21.8	11.04	26.4
	0.15	5.6	4.13	6.6	6.20	9.9	8.27	13.2	10.33	16.5	12.40	19.8	3.72	5.9	5.79	9.2	7.85	12.5	9.92	15.8	11.99	19.1
	0.20	9.3	4.32	5.2	6.48	7.8	8.65	10.3	10.81	12.9	12.97	15.5	3.89	4.7	6.05	7.2	8.22	9.8	10.38	12.4	12.54	15.0
	0.30	18.7	4.54	3.6	6.81	5.4	9.08	7.2	11.35	9.0	13.62	10.8	4.08	3.3	6.35	5.1	8.62	6.9	10.89	8.7	13.17	10.5
800	0.15	7.3	4.77	7.6	7.16	11.4	9.55	15.2	11.94	19.0	14.33	22.8	4.30	6.8	6.68	10.7	9.07	14.5	11.46	18.3	13.85	22.1
	0.20	12.0	5.02	6.0	7.54	9.0	10.05	12.0	12.57	15.0	15.08	18.0	4.52	5.4	7.04	8.4	9.55	11.4	12.07	14.4	14.58	17.4
	0.25	17.6	5.19	5.0	7.79	7.4	10.39	9.9	12.98	12.4	15.58	14.9	4.67	4.5	7.27	7.0	9.87	9.4	12.47	11.9	15.06	14.4
	0.30	24.1	5.31	4.2	7.97	6.3	10.62	8.5	13.28	10.6	15.94	12.7	4.78	3.8	7.44	5.9	10.09	8.0	12.75	10.2	15.41	12.3
1000	0.20	2.1	6.34	7.6	9.51	11.4	12.69	15.2	15.86	18.9	19.03	22.7	5.71	6.8	8.88	10.6	12.05	14.4	15.22	18.2	18.40	22.0
	0.30	4.2	6.80	5.4	10.20	8.1	13.60	10.8	17.00	13.5	20.40	16.3	6.12	4.9	9.52	7.6	12.92	10.3	16.32	13.0	19.72	15.7
	0.40	6.9	7.06	4.2	10.59	6.3	14.12	8.4	17.66	10.5	21.19	12.7	6.35	3.8	9.88	5.9	13.42	8.0	16.95	10.1	20.48	12.2
	0.50	10.1	7.23	3.5	10.85	5.2	14.47	6.9	18.08	8.6	21.70	10.4	6.51	3.1	10.12	4.8	13.74	6.6	17.36	8.3	20.98	10.0
1200	0.20	2.4	7.66	9.2	11.49	13.7	15.32	18.3	19.15	22.9	22.98	27.5	6.89	8.2	10.72	12.8	14.55	17.4	18.38	22.0	22.21	26.5
	0.30	4.9	8.33	6.6	12.49	10.0	16.66	13.3	20.82	16.6	24.99	19.9	7.49	6.0	11.66	9.3	15.82	12.6	19.99	15.9	24.16	19.2
	0.40	8.1	8.72	5.2	13.08	7.8	17.44	10.4	21.80	13.0	26.16	15.6	7.84	4.7	12.21	7.3	16.57	9.9	20.93	12.5	25.29	15.1
	0.50	11.8	8.97	4.3	13.46	6.4	17.95	8.6	22.45	10.7	26.93	12.9	8.08	3.9	12.57	6.0	17.06	8.2	21.55	10.3	26.04	12.4
1400	0.20	2.7	8.12	9.7	12.19	14.6	16.25	19.4	20.32	24.3	24.38	29.1	7.31	8.7	11.38	13.6	15.44	18.4	19.51	23.3	23.57	28.2
	0.30	5.4	8.88	7.1	13.32	10.6	17.76	14.1	22.20	17.7	26.65	21.2	7.99	6.4	12.43	9.9	16.87	13.4	21.32	17.0	25.76	20.5
	0.40	8.9	9.32	5.6	13.98	8.4	18.64	11.1	23.31	13.9	27.97	16.7	8.39	5.0	13.05	7.8	17.71	10.6	22.37	13.4	27.04	16.2
	0.55	15.5	9.72	4.2	14.59	6.3	19.46	8.5	24.32	10.6	29.18	12.7	8.75	3.8	13.62	5.9	18.48	8.0	23.35	10.1	28.21	12.3

Note:To obtain accurate air volume and cooling/heating capacities,refer to pages 54-74

Ceiling Recessed Model-Standard Model 2-Row Cooling, 1-Row Heating

SRC-2SW-DC1 220V

COOLING Capacity

Unit Size	Water Flow (l/sec)	W.P.D (kPa)	Entering Air Condition DB=24.0°C WB=17.8°C (55%)									Entering Air Condition DB=26.0°C WB=19.5°C (55%)								
			Entering Water Temperature									Entering Water Temperature								
			5°C			7°C			9°C			5°C			7°C			9°C		
			SH (kW)	TH (kW)	ΔWT (°C)	SH (kW)	TH (kW)	ΔWT (°C)	SH (kW)	TH (kW)	ΔWT (°C)	SH (kW)	TH (kW)	ΔWT (°C)	SH (kW)	TH (kW)	ΔWT (°C)	SH (kW)	TH (kW)	ΔWT (°C)
300	0.03	0.8	0.91	1.03	7.5	0.83	0.91	6.6	0.76	0.79	5.8	0.97	1.16	8.5	0.88	1.04	7.6	0.80	0.92	6.7
	0.07	2.8	1.24	1.50	5.3	1.13	1.32	4.7	1.02	1.14	4.1	1.33	1.70	6.1	1.22	1.53	5.5	1.10	1.35	4.8
	0.10	5.6	1.39	1.74	4.2	1.26	1.54	3.7	1.14	1.32	3.2	1.50	1.99	4.8	1.37	1.79	4.3	1.24	1.57	3.8
	0.15	11.2	1.51	1.96	3.1	1.37	1.73	2.8	1.23	1.48	2.4	1.64	2.25	3.6	1.49	2.02	3.2	1.35	1.77	2.8
400	0.07	4.0	1.71	2.07	7.4	1.55	1.83	6.5	1.41	1.58	5.7	1.83	2.36	8.4	1.67	2.11	7.6	1.52	1.86	6.7
	0.10	8.0	1.94	2.44	5.8	1.75	2.15	5.1	1.58	1.85	4.4	2.08	2.78	6.7	1.90	2.49	6.0	1.72	2.20	5.3
	0.15	16.1	2.12	2.77	4.4	1.92	2.44	3.9	1.73	2.10	3.4	2.29	3.18	5.1	2.08	2.84	4.5	1.88	2.50	4.0
	0.20	26.4	2.22	2.99	3.6	2.00	2.63	3.1	1.80	2.25	2.7	2.40	3.43	4.1	2.18	3.07	3.7	1.97	2.69	3.2
600	0.07	4.6	2.11	2.52	9.0	1.92	2.23	8.0	1.74	1.94	6.9	2.26	2.87	10.2	2.06	2.57	9.2	1.87	2.27	8.1
	0.10	9.3	2.44	3.02	7.2	2.21	2.67	6.4	2.00	2.31	5.5	2.62	3.45	8.2	2.39	3.09	7.4	2.17	2.72	6.5
	0.15	18.7	2.71	3.49	5.6	2.46	3.08	4.9	2.22	2.65	4.2	2.92	4.00	6.4	2.66	3.58	5.7	2.41	3.15	5.0
	0.20	30.7	2.87	3.80	4.5	2.59	3.34	4.0	2.33	2.87	3.4	3.10	4.35	5.2	2.82	3.90	4.7	2.55	3.43	4.1
800	0.07	6.0	2.45	2.97	10.6	2.23	2.63	9.4	2.02	2.28	8.1	2.62	3.37	12.0	2.39	3.03	10.8	2.18	2.67	9.5
	0.10	12.0	2.84	3.58	8.6	2.58	3.16	7.6	2.33	2.73	6.5	3.05	4.08	9.7	2.78	3.66	8.7	2.53	3.22	7.7
	0.15	24.1	3.18	4.16	6.6	2.88	3.66	5.8	2.60	3.15	5.0	3.43	4.76	7.6	3.12	4.26	6.8	2.83	3.75	6.0
	0.20	39.7	3.38	4.54	5.4	3.05	4.00	4.8	2.75	3.43	4.1	3.65	5.20	6.2	3.32	4.66	5.6	3.00	4.09	4.9
1000	0.10	2.1	3.09	3.58	8.6	2.81	3.17	7.6	2.56	2.76	6.6	3.30	4.05	9.7	3.01	3.64	8.7	2.74	3.22	7.7
	0.20	6.9	4.01	4.94	5.9	3.64	4.36	5.2	3.29	3.77	4.5	4.31	5.64	6.7	3.93	5.06	6.0	3.56	4.45	5.3
	0.30	13.8	4.42	5.66	4.5	4.00	4.99	4.0	3.61	4.30	3.4	4.77	6.48	5.2	4.34	5.81	4.6	3.93	5.10	4.1
	0.40	22.8	4.65	6.12	3.7	4.20	5.39	3.2	3.78	4.63	2.8	5.02	7.02	4.2	4.57	6.29	3.8	4.14	5.52	3.3
1200	0.10	2.4	3.57	4.13	9.9	3.25	3.66	8.8	2.97	3.19	7.6	3.81	4.67	11.2	3.48	4.20	10.0	3.17	3.71	8.9
	0.20	8.1	4.72	5.80	6.9	4.28	5.12	6.1	3.88	4.43	5.3	5.06	6.60	7.9	4.61	5.92	7.1	4.19	5.22	6.2
	0.30	16.2	5.24	6.70	5.3	4.75	5.90	4.7	4.29	5.09	4.1	5.65	7.66	6.1	5.15	6.86	5.5	4.66	6.04	4.8
	0.45	32.8	5.65	7.50	4.0	5.11	6.60	3.5	4.59	5.67	3.0	6.10	8.60	4.6	5.55	7.70	4.1	5.02	6.76	3.6
1400	0.10	2.7	3.87	4.47	10.7	3.52	3.97	9.5	3.22	3.45	8.3	4.12	5.05	12.1	3.76	4.54	10.9	3.43	4.02	9.6
	0.20	8.9	5.15	6.33	7.6	4.67	5.59	6.7	4.23	4.84	5.8	5.52	7.20	8.6	5.03	6.46	7.7	4.57	5.70	6.8
	0.30	18.0	5.75	7.34	5.9	5.21	6.48	5.2	4.71	5.58	4.5	6.19	8.39	6.7	5.64	7.52	6.0	5.11	6.62	5.3
	0.45	36.2	6.21	8.25	4.4	5.62	7.27	3.9	5.06	6.25	3.3	6.71	9.46	5.0	6.11	8.48	4.5	5.53	7.45	4.0

HEATING Capacity

Unit Size	Water Flow (l/sec)	W.P.D (kPa)	Entering Air Condition DB=20.0°C										Entering Air Condition DB=22.0°C									
			Entering Water Temperature										Entering Water Temperature									
			40°C		50°C		60°C		70°C		80°C		40°C		50°C		60°C		70°C		80°C	
			TH (kW)	ΔWT (°C)	TH (kW)	ΔWT (°C)	TH (kW)	ΔWT (°C)	TH (kW)	ΔWT (°C)	TH (kW)	ΔWT (°C)	TH (kW)	ΔWT (°C)	TH (kW)	ΔWT (°C)	TH (kW)	ΔWT (°C)	TH (kW)	ΔWT (°C)	TH (kW)	ΔWT (°C)
300	0.03	2.3	0.94	7.6	1.42	11.3	1.89	15.1	2.37	18.9	2.84	22.7	0.85	6.8	1.32	10.6	1.80	14.4	2.27	18.1	2.75	21.9
	0.05	5.6	1.03	5.0	1.55	7.4	2.07	9.9	2.59	12.4	3.11	14.9	0.93	4.5	1.45	7.0	1.97	9.4	2.49	11.9	3.01	14.4
	0.08	12.6	1.10	3.3	1.65	4.9	2.20	6.6	2.75	8.2	3.30	9.9	0.99	3.0	1.54	4.6	2.09	6.3	2.64	7.9	3.19	9.6
	0.10	18.5	1.12	2.7	1.69	4.0	2.25	5.4	2.82	6.7	3.38	8.1	1.01	2.4	1.57	3.8	2.14	5.1	2.70	6.5	3.27	7.8
400	0.03	3.3	1.28	10.2	1.92	15.3	2.56	20.4	3.20	25.5	3.84	30.6	1.15	9.2	1.79	14.3	2.43	19.4	3.07	24.5	3.71	29.6
	0.05	8.0	1.44	6.9	2.16	10.3	2.88	13.8	3.60	17.2	4.32	20.7	1.29	6.2	2.01	9.6	2.73	13.1	3.45	16.5	4.18	20.0
	0.08	18.0	1.55	4.7	2.33	7.0	3.11	9.3	3.89	11.6	4.67	14.0	1.40	4.2	2.18	6.5	2.96	8.8	3.73	11.2	4.51	13.5
	0.10	26.4	1.60	3.8	2.40	5.7	3.20	7.7	4.01	9.6	4.81	11.5	1.44	3.4	2.24	5.4	3.04	7.3	3.84	9.2	4.65	11.1
600	0.03	3.8	1.54	12.3	2.32	18.5	3.09	24.7	3.87	30.8	4.64	37.0	1.39	11.1	2.16	17.3	2.94	23.4	3.71	29.6	4.48	35.7
	0.05	9.3	1.78	8.5	2.67	12.8	3.57	17.1	4.46	21.3	5.35	25.6	1.60	7.7	2.50	11.9	3.39	16.2	4.28	20.5	5.17	24.7
	0.08	20.9	1.96	5.9	2.94	8.8	3.92	11.7	4.91	14.7	5.89	17.6	1.76	5.3	2.74	8.2	3.73	11.1	4.71	14.1	5.69	17.0
	0.10	30.7	2.03	4.9	3.05	7.3	4.07	9.7	5.08	12.2	6.10	14.6	1.83	4.4	2.84	6.8	3.86	9.2	4.88	11.7	5.90	14.1
800	0.03	4.9	1.77	14.1	2.66	21.2	3.54	28.2	4.43	35.3	5.32	42.4	1.59	12.7	2.48	19.8	3.36	26.8	4.25	33.9	5.14	41.0
	0.05	12.0	2.08	10.0	3.12	14.9	4.17	19.9	5.21	24.9	6.25	29.9	1.87	9.0	2.91	13.9	3.96	18.9	5.00	23.9	6.04	28.9
	0.08	27.0	2.32	6.9	3.48	10.4	4.64	13.9	5.81	17.4	6.97	20.8	2.09	6.2	3.25	9.7	4.41	13.2	5.57	16.7	6.74	20.1
	0.10	39.7	2.42	5.8	3.63	8.7	4.84	11.6	6.05	14.5	7.26	17.3	2.17	5.2	3.38	8.1	4.59	11.0	5.80	13.9	7.02	16.8
1000	0.03	5.6	2.06	16.5	3.10	24.7	4.13	32.9	5.17	41.2	6.20	49.4	1.86	14.8	2.89	23.1	3.93	31.3	4.96	39.5	5.99	47.8
	0.05	13.6	2.50	12.0	3.75	17.9	5.00	23.9	6.25	29.9	7.50	35.9	2.25	10.8	3.50	16.7	4.75	22.7	6.00	28.7	7.25	34.7
	0.08	30.6	2.84	8.5	4.27	12.8	5.69	17.0	7.12	21.3	8.54	25.5	2.56	7.7	3.98	11.9	5.41	16.2	6.83	20.4	8.26	24.7
	0.10	45.1	2.99	7.2	4.49	10.7	5.98	14.3	7.48	17.9	8.98	21.5	2.69	6.4	4.19	10.0	5.68	13.6	7.18	17.2	8.68	20.7
1200	0.03	6.6	2.30	18.4	3.46	27.6	4.61	36.7	5.76	45.9	6.92	55.1	2.07	16.5	3.22	25.7	4.38	34.9	5.53	44.1	6.68	53.3
	0.05	16.0	2.85	13.6	4.28	20.5	5.70	27.3	7.13	34.1	8.56	40.9	2.56	12.3	3.99	19.1	5.42	25.9	6.84	32.7	8.27	39.5
	0.08	36.0	3.30	9.9	4.96	14.8	6.61	19.8	8.26	24.7	9.92	29.6	2.97	8.9	4.63	13.8	6.28	18.8	7.93	23.7	9.59	28.6
	0.09	44.2	3.41	9.1	5.11	13.6	6.82	18.1	8.52	22.6	10.23	27.2	3.06	8.1	4.77	12.7	6.48	17.2	8.18	21.7	9.89	26.3
1400	0.03	7.3	2.44	19.5	3.66	29.2	4.88	38.9	6.10	48.6	7.32	58.4	2.19	17.5	3.42	27.2	4.64	37.0	5.86	46.7	7.08	56.4
	0.05	17.7	3.06	14.6	4.59	21.9	6.12	29.3	7.65	36.6	9.18	43.9	2.75	13.2	4.28	20.5	5.81	27.8	7.34	35.1	8.87	42.4
	0.08	39.9	3.58	10.7	5.37	16.1	7.17	21.4	8.96	26.8	10.75	32.1	3.22	9.6	5.02	15.0	6.81	20.3	8.60	25.7	10.40	31.1
	0.09	48.9	3.70	9.8	5.55	14.8	7.41	19.7	9.26	24.6	11.11	29.5	3.33	8.9	5.18	13.8	7.04	18.7	8.89	23.6	10.74	28.5

Note:To obtain accurate air volume and cooling/heating capacities,refer to pages 54-74

Ceiling Recessed Model-Standard Model 3-Row Cooling, 1-Row Heating

SRC-2SW-DC2 220V

COOLING Capacity

Unit Size	Water Flow (l/sec)	W.P.D (kPa)	Entering Air Condition DB=24.0°C WB=17.8°C (55%)									Entering Air Condition DB=26.0°C WB=19.5°C (55%)								
			Entering Water Temperature									Entering Water Temperature								
			5°C			7°C			9°C			5°C			7°C			9°C		
			SH (kW)	TH (kW)	ΔWT (°C)	SH (kW)	TH (kW)	ΔWT (°C)	SH (kW)	TH (kW)	ΔWT (°C)	SH (kW)	TH (kW)	ΔWT (°C)	SH (kW)	TH (kW)	ΔWT (°C)	SH (kW)	TH (kW)	ΔWT (°C)
300	0.05	0.8	1.17	1.42	6.8	1.06	1.26	6.0	0.96	1.09	5.2	1.26	1.62	7.8	1.15	1.45	7.0	1.04	1.28	6.1
	0.10	2.8	1.53	1.98	4.7	1.38	1.74	4.2	1.24	1.50	3.6	1.65	2.27	5.4	1.50	2.03	4.9	1.36	1.78	4.3
	0.15	5.6	1.68	2.27	3.6	1.52	1.99	3.2	1.36	1.71	2.7	1.82	2.61	4.2	1.66	2.33	3.7	1.50	2.05	3.3
	0.20	9.2	1.77	2.45	2.9	1.59	2.15	2.6	1.43	1.84	2.2	1.92	2.82	3.4	1.74	2.53	3.0	1.57	2.21	2.7
400	0.10	3.9	2.07	2.71	6.5	1.88	2.39	5.7	1.69	2.06	4.9	2.23	3.11	7.4	2.03	2.78	6.7	1.84	2.45	5.9
	0.15	8.0	2.30	3.14	5.0	2.08	2.76	4.4	1.87	2.37	3.8	2.48	3.60	5.7	2.26	3.22	5.1	2.05	2.83	4.5
	0.20	13.1	2.42	3.41	4.1	2.19	3.00	3.6	1.96	2.57	3.1	2.62	3.92	4.7	2.39	3.51	4.2	2.16	3.08	3.7
	0.25	19.3	2.50	3.60	3.4	2.26	3.16	3.0	2.02	2.71	2.6	2.71	4.15	4.0	2.47	3.71	3.6	2.23	3.25	3.1
600	0.10	4.6	2.64	3.40	8.1	2.39	3.00	7.2	2.16	2.59	6.2	2.84	3.88	9.3	2.59	3.48	8.3	2.35	3.06	7.3
	0.15	9.3	2.99	4.00	6.4	2.71	3.53	5.6	2.44	3.03	4.8	3.23	4.59	7.3	2.94	4.11	6.6	2.66	3.61	5.8
	0.20	15.2	3.20	4.40	5.3	2.89	3.87	4.6	2.60	3.32	4.0	3.46	5.06	6.0	3.15	4.53	5.4	2.84	3.97	4.8
	0.30	30.7	3.42	4.92	3.9	3.09	4.32	3.4	2.77	3.70	2.9	3.71	5.66	4.5	3.37	5.06	4.0	3.04	4.44	3.5
800	0.15	12.0	3.51	4.76	7.6	3.17	4.19	6.7	2.86	3.60	5.7	3.78	5.45	8.7	3.44	4.88	7.8	3.12	4.29	6.8
	0.20	19.7	3.76	5.25	6.3	3.40	4.62	5.5	3.05	3.96	4.7	4.07	6.03	7.2	3.70	5.40	6.5	3.35	4.74	5.7
	0.25	29.0	3.93	5.62	5.4	3.54	4.94	4.7	3.18	4.23	4.0	4.25	6.46	6.2	3.87	5.78	5.5	3.50	5.07	4.8
	0.30	39.7	4.04	5.90	4.7	3.65	5.18	4.1	3.27	4.43	3.5	4.38	6.79	5.4	3.99	6.07	4.8	3.60	5.32	4.2
1000	0.20	3.4	4.38	5.59	6.7	3.96	4.93	5.9	3.58	4.25	5.1	4.71	6.39	7.6	4.29	5.73	6.8	3.89	5.04	6.0
	0.30	6.9	4.91	6.53	5.2	4.44	5.75	4.6	4.00	4.94	3.9	5.31	7.49	6.0	4.83	6.71	5.3	4.37	5.89	4.7
	0.40	11.3	5.22	7.14	4.3	4.72	6.28	3.8	4.24	5.39	3.2	5.65	8.21	4.9	5.14	7.35	4.4	4.65	6.45	3.9
	0.50	16.6	5.41	7.58	3.6	4.89	6.67	3.2	4.38	5.71	2.7	5.87	8.72	4.2	5.34	7.81	3.7	4.82	6.85	3.3
1200	0.20	4.0	5.25	6.66	8.0	4.76	5.88	7.0	4.31	5.08	6.1	5.64	7.60	9.1	5.14	6.81	8.1	4.67	6.00	7.2
	0.30	8.1	5.97	7.88	6.3	5.40	6.94	5.5	4.87	5.97	4.8	6.44	9.02	7.2	5.86	8.08	6.4	5.31	7.10	5.7
	0.40	13.2	6.39	8.68	5.2	5.78	7.64	4.6	5.20	6.56	3.9	6.91	9.96	5.9	6.29	8.92	5.3	5.69	7.83	4.7
	0.50	19.5	6.66	9.26	4.4	6.02	8.15	3.9	5.41	6.98	3.3	7.21	10.64	5.1	6.56	9.52	4.6	5.93	8.36	4.0
1400	0.20	4.4	5.61	7.14	8.5	5.08	6.31	7.5	4.60	5.44	6.5	6.02	8.14	9.7	5.49	7.30	8.7	4.98	6.43	7.7
	0.30	8.9	6.39	8.46	6.7	5.78	7.46	5.9	5.21	6.42	5.1	6.89	9.68	7.7	6.27	8.68	6.9	5.11	6.62	5.3
	0.40	14.7	6.85	9.34	5.6	6.19	8.22	4.9	5.57	7.06	4.2	7.40	10.71	6.4	6.73	9.59	5.7	5.42	7.22	4.3
	0.55	25.4	7.26	10.24	4.4	6.56	9.00	3.9	5.89	7.71	3.4	7.86	11.76	5.1	7.15	10.53	4.6	5.69	7.82	3.4

◀35·36

HEATING Capacity

Unit Size	Water Flow (l/sec)	W.P.D (kPa)	Entering Air Condition DB=20.0°C										Entering Air Condition DB=22.0°C									
			Entering Water Temperature										Entering Water Temperature									
			40°C		50°C		60°C		70°C		80°C		40°C		50°C		60°C		70°C		80°C	
			TH (kW)	ΔWT (°C)	TH (kW)	ΔWT (°C)	TH (kW)	ΔWT (°C)	TH (kW)	ΔWT (°C)	TH (kW)	ΔWT (°C)	TH (kW)	ΔWT (°C)	TH (kW)	ΔWT (°C)	TH (kW)	ΔWT (°C)	TH (kW)	ΔWT (°C)	TH (kW)	ΔWT (°C)
300	0.03	2.3	0.91	7.3	1.37	11.0	1.83	14.6	2.29	18.3	2.75	21.9	0.82	6.6	1.28	10.2	1.74	13.9	2.20	17.6	2.66	21.2
	0.05	5.6	1.00	4.8	1.50	7.2	2.00	9.6	2.50	12.0	3.00	14.4	0.90	4.3	1.40	6.7	1.90	9.1	2.40	11.5	2.90	13.9
	0.08	12.6	1.06	3.2	1.59	4.8	2.12	6.3	2.65	7.9	3.18	9.5	0.95	2.9	1.48	4.4	2.01	6.0	2.54	7.6	3.07	9.2
	0.10	18.5	1.08	2.6	1.62	3.9	2.17	5.2	2.71	6.5	3.25	7.8	0.97	2.3	1.51	3.6	2.06	4.9	2.60	6.2	3.14	7.5
400	0.03	3.3	1.23	9.8	1.84	14.7	2.46	19.6	3.07	24.5	3.69	29.4	1.10	8.8	1.72	13.7	2.33	18.6	2.95	23.5	3.57	28.4
	0.05	8.0	1.37	6.6	2.06	9.9	2.75	13.2	3.44	16.5	4.13	19.8	1.24	5.9	1.93	9.2	2.62	12.5	3.31	15.8	4.00	19.1
	0.08	18.0	1.48	4.4	2.22	6.7	2.97	8.9	3.71	11.1	4.45	13.3	1.33	4.0	2.08	6.2	2.82	8.4	3.56	10.7	4.30	12.9
	0.10	26.4	1.52	3.7	2.29	5.5	3.05	7.3	3.81	9.1	4.58	11.0	1.37	3.3	2.13	5.1	2.90	6.9	3.66	8.8	4.43	10.6
600	0.03	3.8	1.50	12.0	2.25	18.0	3.01	24.0	3.76	30.0	4.51	36.0	1.35	10.8	2.10	16.8	2.85	22.8	3.61	28.8	4.36	34.8
	0.05	9.3	1.72	8.3	2.59	12.4	3.45	16.5	4.32	20.7	5.18	24.8	1.55	7.4	2.42	11.6	3.28	15.7	4.14	19.8	5.01	24.0
	0.08	20.9	1.89	5.7	2.84	8.5	3.79	11.3	4.73	14.2	5.68	17.0	1.70	5.1	2.65	7.9	3.60	10.8	4.54	13.6	5.49	16.4
	0.10	30.7	1.96	4.7	2.94	7.0	3.92	9.4	4.90	11.7	5.88	14.1	1.76	4.2	2.74	6.6	3.72	8.9	4.70	11.2	5.68	13.6
800	0.03	4.9	1.73	13.8	2.60	20.7	3.47	27.7	4.34	34.6	5.20	41.5	1.56	12.4	2.43	19.4	3.29	26.3	4.16	33.2	5.03	40.1
	0.05	12.0	2.03	9.7	3.05	14.6	4.06	19.4	5.08	24.3	6.10	29.2	1.83	8.7	2.84	13.6	3.86	18.5	4.88	23.3	5.89	28.2
	0.08	27.0	2.26	6.8	3.39	10.1	4.52	13.5	5.65	16.9	6.78	20.3	2.03	6.1	3.16	9.5	4.29	12.8	5.42	16.2	6.55	19.6
	0.10	39.7	2.35	5.6	3.52	8.4	4.70	11.2	5.87	14.0	7.05	16.9	2.11	5.1	3.29	7.9	4.46	10.7	5.64	13.5	6.82	16.3
1000	0.03	5.6	2.02	16.1	3.03	24.1	4.04	32.2	5.05	40.2	6.06	48.3	1.81	14.5	2.82	22.5	3.84	30.6	4.85	38.6	5.86	46.7
	0.05	13.6	2.43	11.6	3.65	17.4	4.86	23.3	6.08	29.1	7.30	34.9	2.19	10.5	3.40	16.3	4.62	22.1	5.84	27.9	7.05	33.7
	0.08	30.6	2.76	8.2	4.14	12.4	5.52	16.5	6.90	20.6	8.28	24.7	2.48	7.4	3.86	11.5	5.24	15.7	6.62	19.8	8.00	23.9
	0.10	45.1	2.89	6.9	4.34	10.4	5.79	13.8	7.23	17.3	8.68	20.7	2.60	6.2	4.05	9.7	5.50	13.1	6.94	16.6	8.39	20.1
1200	0.03	6.6	2.29	18.3	3.43	27.4	4.58	36.5	5.72	45.6	6.87	54.8	2.06	16.4	3.20	25.6	4.35	34.7	5.50	43.8	6.64	52.9
	0.05	16.0	2.83	13.5	4.24	20.3	5.66	27.1	7.07	33.8	8.49	40.6	2.54	12.2	3.96	18.9	5.37	25.7	6.79	32.5	8.21	39.2
	0.08	36.0	3.27	9.8	4.91	14.7	6.55	19.6	8.19	24.5	9.83	29.4	2.94	8.8	4.58	13.7	6.22	18.6	7.86	23.5	9.50	28.4
	0.09	44.2	3.37	9.0	5.06	13.5	6.75	17.9	8.44	22.4	10.13	26.9	3.04	8.1	4.73	12.6	6.41	17.0	8.10	21.5	9.79	26.0
1400	0.03	7.3	2.40	19.1	3.60	28.7	4.80	38.2	6.00	47.8	7.20	57.3	2.16	17.2	3.36	26.8	4.56	36.3	5.76	45.9	6.96	55.4
	0.05	17.7	2.99	14.3	4.49	21.5	5.99	28.6	7.48	35.8	8.98	42.9	2.69	12.9	4.19	20.0	5.69	27.2	7.18	34.3	8.68	41.5
	0.08	39.9	3.49	10.4	5.24	15.7	6.99	20.9	8.73	26.1	10.48	31.3	3.14	9.4	4.89	14.6	6.64	19.8	8.38	25.1	10.13	30.3
	0.09	48.9	3.60	9.6	5.41	14.4	7.21	19.2	9.02	24.0	10.82	28.7	3.24	8.6	5.05	13.4	6.85	18.2	8.66	23.0	10.46	27.8

Note:To obtain accurate air volume and cooling/heating capacities,refer to pages 54-74

Ceiling Recessed Model-Standard Model 4-Row, High Temperature Rise

SRC-2SW-HT 220V

COOLING Capacity

Unit Size	Water Flow (l/sec)	W.P.D (kPa)	Entering Air Condition DB=24.0°C WB=17.8°C (55%)									Entering Air Condition DB=26.0°C WB=19.5°C (55%)								
			Entering Water Temperature									Entering Water Temperature								
			5°C			7°C			9°C			5°C			7°C			9°C		
			SH (kW)	TH (kW)	ΔWT (°C)	SH (kW)	TH (kW)	ΔWT (°C)	SH (kW)	TH (kW)	ΔWT (°C)	SH (kW)	TH (kW)	ΔWT (°C)	SH (kW)	TH (kW)	ΔWT (°C)	SH (kW)	TH (kW)	ΔWT (°C)
300	0.05	3.3	1.43	1.89	9.1	1.29	1.67	8.0	1.17	1.44	6.9	1.53	2.16	10.4	1.40	1.94	9.3	1.27	1.71	8.2
	0.10	11.0	1.75	2.50	6.0	1.58	2.20	5.3	1.42	1.88	4.5	1.89	2.87	6.9	1.72	2.57	6.1	1.56	2.26	5.4
	0.15	22.2	1.88	2.81	4.5	1.70	2.47	3.9	1.52	2.11	3.4	2.04	3.24	5.2	1.86	2.90	4.6	1.68	2.54	4.1
	0.20	36.6	1.95	3.01	3.6	1.76	2.65	3.2	1.58	2.26	2.7	2.12	3.47	4.2	1.93	3.11	3.7	1.74	2.72	3.3
400	0.05	4.8	1.84	2.47	11.8	1.67	2.18	10.5	1.51	1.89	9.0	1.97	2.81	13.5	1.80	2.52	12.1	1.63	2.23	10.7
	0.10	15.8	2.31	3.34	8.0	2.09	2.94	7.0	1.88	2.53	6.0	2.49	3.82	9.1	2.27	3.43	8.2	2.05	3.01	7.2
	0.15	31.9	2.51	3.80	6.1	2.27	3.34	5.3	2.04	2.87	4.6	2.72	4.37	7.0	2.47	3.91	6.2	2.24	3.43	5.5
	0.20	52.4	2.63	4.11	4.9	2.37	3.61	4.3	2.13	3.09	3.7	2.84	4.72	5.6	2.59	4.23	5.1	2.34	3.71	4.4
600	0.05	5.5	2.26	2.98	14.3	2.05	2.64	12.6	1.86	2.28	10.9	2.41	3.38	16.2	2.20	3.04	14.5	2.01	2.68	12.8
	0.10	18.4	2.97	4.21	10.1	2.69	3.71	8.9	2.43	3.19	7.6	3.20	4.81	11.5	2.91	4.31	10.3	2.64	3.79	9.1
	0.15	37.0	3.31	4.90	7.8	3.00	4.31	6.9	2.69	3.70	5.9	3.58	5.62	9.0	3.26	5.03	8.0	2.95	4.42	7.0
	0.17	46.0	3.40	5.10	7.2	3.08	4.49	6.3	2.76	3.85	5.4	3.68	5.86	8.2	3.35	5.24	7.4	3.03	4.60	6.5
800	0.05	7.2	2.54	3.39	16.2	2.31	3.00	14.4	2.09	2.60	12.4	2.71	3.84	18.4	2.47	3.45	16.5	2.25	3.05	14.6
	0.10	23.8	3.40	4.87	11.7	3.08	4.30	10.3	2.77	3.70	8.9	3.65	5.56	13.3	3.33	4.99	11.9	3.02	4.39	10.5
	0.13	37.5	3.68	5.43	10.0	3.33	4.79	8.8	3.00	4.11	7.6	3.96	6.22	11.4	3.61	5.57	10.2	3.27	4.90	9.0
	0.15	48.0	3.82	5.73	9.1	3.45	5.05	8.0	3.11	4.33	6.9	4.12	6.57	10.5	3.75	5.88	9.4	3.40	5.17	8.2
1000	0.10	4.1	3.89	5.09	12.2	3.53	4.50	10.8	3.20	3.89	9.3	4.16	5.79	13.8	3.80	5.20	12.4	3.45	4.58	11.0
	0.20	13.6	5.00	7.03	8.4	4.53	6.19	7.4	4.08	5.32	6.4	5.39	8.04	9.6	4.91	7.21	8.6	4.45	6.34	7.6
	0.30	27.4	5.50	8.08	6.4	4.97	7.11	5.7	4.47	6.10	4.9	5.95	9.28	7.4	5.41	8.31	6.6	4.90	7.29	5.8
	0.40	45.1	5.78	8.77	5.2	5.22	7.71	4.6	4.68	6.60	3.9	6.26	10.09	6.0	5.70	9.03	5.4	5.15	7.92	4.7
1200	0.10	4.8	4.52	5.87	14.0	4.10	5.19	12.4	3.73	4.50	10.8	4.82	6.66	15.9	4.40	5.98	14.3	4.01	5.28	12.6
	0.20	16.0	5.98	8.33	10.0	5.42	7.35	8.8	4.89	6.33	7.6	6.42	9.51	11.4	5.86	8.53	10.2	5.31	7.51	9.0
	0.30	32.2	6.67	9.72	7.7	6.04	8.56	6.8	5.43	7.35	5.9	7.20	11.14	8.9	6.56	9.98	7.9	5.94	8.77	7.0
	0.35	42.1	6.90	10.22	7.0	6.24	9.00	6.1	5.61	7.72	5.3	7.45	11.72	8.0	6.78	10.50	7.2	6.14	9.22	6.3
1400	0.10	5.3	4.75	6.20	14.8	4.32	5.49	13.1	3.92	4.76	11.4	5.07	7.02	16.8	4.63	6.31	15.1	4.21	5.58	13.3
	0.20	17.7	6.33	8.86	10.6	5.73	7.82	9.3	5.18	6.73	8.0	6.80	10.11	12.1	6.20	9.07	10.8	5.62	7.98	9.5
	0.30	35.7	7.09	10.38	8.3	6.42	9.14	7.3	5.78	7.85	6.3	7.65	11.88	9.5	6.96	10.65	8.5	6.31	9.36	7.5
	0.35	46.6	7.34	10.93	7.5	6.64	9.62	6.6	5.97	8.25	5.6	7.92	12.52	8.6	7.22	11.22	7.7	6.53	9.86	6.7

HEATING Capacity

Unit Size	Water Flow (l/sec)	W.P.D (kPa)	Entering Air Condition DB=20.0°C										Entering Air Condition DB=22.0°C									
			Entering Water Temperature										Entering Water Temperature									
			40°C		50°C		60°C		70°C		80°C		40°C		50°C		60°C		70°C		80°C	
			TH (kW)	ΔWT (°C)	TH (kW)	ΔWT (°C)	TH (kW)	ΔWT (°C)	TH (kW)	ΔWT (°C)	TH (kW)	ΔWT (°C)	TH (kW)	ΔWT (°C)	TH (kW)	ΔWT (°C)	TH (kW)	ΔWT (°C)	TH (kW)	ΔWT (°C)	TH (kW)	ΔWT (°C)
300	0.05	3.3	1.94	9.3	2.91	13.9	3.88	18.6	4.85	23.2	5.83	27.9	1.74	8.4	2.72	13.0	3.69	17.6	4.66	22.3	5.63	26.9
	0.10	11.0	2.21	5.3	3.32	7.9	4.42	10.6	5.53	13.2	6.64	15.9	1.99	4.8	3.09	7.4	4.20	10.0	5.31	12.7	6.41	15.3
	0.15	22.2	2.32	3.7	3.48	5.6	4.65	7.4	5.81	9.3	6.97	11.1	2.09	3.3	3.25	5.2	4.41	7.0	5.58	8.9	6.74	10.7
	0.20	36.6	2.38	2.9	3.58	4.3	4.77	5.7	5.96	7.1	7.16	8.6	2.14	2.6	3.34	4.0	4.53	5.4	5.73	6.8	6.92	8.3
400	0.05	4.8	2.50	12.0	3.76	18.0	5.01	24.0	6.26	29.9	7.52	35.9	2.25	10.8	3.50	16.8	4.76	22.8	6.01	28.7	7.27	34.7
	0.10	15.8	2.96	7.1	4.44	10.6	5.92	14.2	7.41	17.7	8.89	21.2	2.66	6.4	4.15	9.9	5.63	13.5	7.11	17.0	8.59	20.5
	0.15	31.9	3.16	5.0	4.74	7.6	6.32	10.1	7.90	12.6	9.48	15.1	2.84	4.5	4.42	7.0	6.00	9.6	7.58	12.1	9.16	14.6
	0.20	52.4	3.27	3.9	4.90	5.9	6.54	7.8	8.18	9.8	9.81	11.7	2.94	3.5	4.58	5.5	6.21	7.4	7.85	9.4	9.49	11.3
600	0.05	5.5	3.10	14.8	4.65	22.2	6.20	29.6	7.75	37.0	9.30	44.5	2.79	13.3	4.34	20.7	5.89	28.2	7.44	35.6	8.99	43.0
	0.10	18.4	3.83	9.2	5.74	13.7	7.66	18.3	9.57	22.9	11.49	27.5	3.44	8.2	5.36	12.8	7.27	17.4	9.19	22.0	11.11	26.5
	0.15	37.0	4.16	6.6	6.24	9.9	8.32	13.3	10.41	16.6	12.49	19.9	3.74	6.0	5.83	9.3	7.91	12.6	9.99	15.9	12.07	19.2
	0.17	46.0	4.25	6.0	6.38	9.0	8.50	12.0	10.63	14.9	12.76	17.9	3.82	5.4	5.95	8.4	8.08	11.4	10.20	14.3	12.33	17.3
800	0.05	7.2	3.45	16.5	5.17	24.7	6.90	33.0	8.63	41.2	10.35	49.5	3.10	14.8	4.83	23.1	6.56	31.3	8.28	39.6	10.01	47.8
	0.10	23.8	4.37	10.4	6.55	15.7	8.74	20.9	10.93	26.1	13.11	31.3	3.93	9.4	6.12	14.6	8.30	19.8	10.49	25.1	12.68	30.3
	0.13	37.5	4.66	8.6	6.99	12.9	9.32	17.1	11.65	21.4	13.99	25.7	4.19	7.7	6.52	12.0	8.86	16.3	11.19	20.6	13.52	24.9
	0.15	48.0	4.80	7.7	7.20	11.5	9.61	15.3	12.01	19.1	14.41	23.0	4.32	6.9	6.72	10.7	9.13	14.5	11.53	18.4	13.93	22.2
1000	0.10	4.1	5.33	12.7	8.00	19.1	10.66	25.5	13.33	31.9	16.00	38.2	4.80	11.5	7.46	17.8	10.13	24.2	12.80	30.6	15.47	37.0
	0.20	13.6	6.39	7.6	9.58	11.4	12.78	15.3	15.97	19.1	19.17	22.9	5.75	6.9	8.94	10.7	12.14	14.5	15.33	18.3	18.53	22.1
	0.30	27.4	6.85	5.5	10.28	8.2	13.71	10.9	17.13	13.6	20.56	16.4	6.16	4.9	9.59	7.6	13.02	10.4	16.45	13.1	19.88	15.8
	0.40	45.1	7.12	4.3	10.68	6.4	14.24	8.5	17.80	10.6	21.36	12.8	6.40	3.8	9.96	6.0	13.53	8.1	17.09	10.2	20.65	12.3
1200	0.10	4.8	6.23	14.9	9.35	22.3	12.46	29.8	15.58	37.2	18.70	44.7	5.61	13.4	8.72	20.9	11.84	28.3	14.96	35.7	18.08	43.2
	0.20	16.0	7.71	9.2	11.57	13.8	15.43	18.4	19.29	23.0	23.15	27.7	6.94	8.3	10.80	12.9	14.66	17.5	18.52	22.1	22.37	26.7
	0.30	32.2	8.39	6.7	12.59	10.0	16.79	13.4	20.99	16.7	25.19	20.1	7.55	6.0	11.75	9.4	15.95	12.7	20.15	16.1	24.35	19.4
	0.35	42.1	8.61	5.9	12.93	8.8	17.24	11.8	21.54	14.7	25.85	17.7	7.75	5.3	12.06	8.2	16.37	11.2	20.68	14.1	24.99	17.1
1400	0.10	5.3	6.54	15.6	9.81	23.4	13.08	31.3	16.35	39.1	19.62	46.9	5.88	14.1	9.15	21.9	12.42	29.7	15.69	37.5	18.97	45.3
	0.20	17.7	8.18	9.8	12.27	14.7	16.37	19.6	20.46	24.4	24.55	29.3	7.36	8.8	11.45	13.7	15.55	18.6	19.64	23.5	23.73	28.4
	0.30	35.7	8.95	7.1	13.42	10.7	17.90	14.3	22.37	17.8	26.85	21.4	8.05	6.4	12.53	10.0	17.00	13.5	21.48	17.1	25.95	20.7
	0.35	46.6	9.20	6.3	13.80	9.4	18.40	12.6	23.00	15.7	27.60	18.8	8.28	5.7	12.88	8.8	17.48	11.9	22.08	15.1	26.68	18.2

Note:To obtain accurate air volume and cooling/heating capacities,refer to pages 54-74

Ceiling Recessed Model-High Static Model 3-Row Cooling/Heating

SRC-2HW-3R 220V

COOLING Capacity

Unit Size	Water Flow (l/sec)	W.P.D (kPa)	Entering Air Condition DB=24.0°C WB=17.8°C (55%)									Entering Air Condition DB=26.0°C WB=19.5°C (55%)								
			Entering Water Temperature									Entering Water Temperature								
			5°C			7°C			9°C			5°C			7°C			9°C		
			SH (kW)	TH (kW)	ΔWT (°C)	SH (kW)	TH (kW)	ΔWT (°C)	SH (kW)	TH (kW)	ΔWT (°C)	SH (kW)	TH (kW)	ΔWT (°C)	SH (kW)	TH (kW)	ΔWT (°C)	SH (kW)	TH (kW)	ΔWT (°C)
300	0.05	0.8	1.28	1.52	7.3	1.16	1.35	6.5	1.06	1.17	5.6	1.37	1.73	8.3	1.25	1.55	7.4	1.14	1.37	6.6
	0.10	2.8	1.71	2.17	5.2	1.55	1.92	4.6	1.40	1.65	4.0	1.84	2.48	5.9	1.68	2.23	5.3	1.52	1.96	4.7
	0.15	5.6	1.91	2.52	4.0	1.72	2.22	3.5	1.55	1.91	3.0	2.06	2.89	4.6	1.87	2.59	4.1	1.70	2.27	3.6
	0.20	9.2	2.02	2.74	3.3	1.82	2.41	2.9	1.64	2.07	2.5	2.18	3.15	3.8	1.98	2.82	3.4	1.79	2.47	3.0
400	0.10	3.9	2.39	3.05	7.3	2.17	2.69	6.4	1.96	2.33	5.6	2.57	3.48	8.3	2.34	3.12	7.5	2.12	2.75	6.6
	0.15	8.0	2.70	3.58	5.7	2.44	3.16	5.0	2.20	2.72	4.3	2.90	4.10	6.5	2.65	3.67	5.9	2.40	3.23	5.2
	0.20	13.1	2.87	3.93	4.7	2.60	3.46	4.1	2.34	2.97	3.6	3.10	4.50	5.4	2.82	4.03	4.8	2.55	3.54	4.2
	0.25	19.3	2.98	4.18	4.0	2.70	3.68	3.5	2.42	3.15	3.0	3.23	4.80	4.6	2.93	4.29	4.1	2.66	3.77	3.6
600	0.10	4.6	2.82	3.58	8.6	2.56	3.17	7.6	2.32	2.74	6.5	3.03	4.08	9.8	2.76	3.66	8.8	2.51	3.23	7.7
	0.15	9.3	3.22	4.26	6.8	2.92	3.75	6.0	2.63	3.23	5.2	3.47	4.87	7.8	3.16	4.36	7.0	2.86	3.84	6.1
	0.20	15.2	3.46	4.70	5.6	3.13	4.14	5.0	2.82	3.56	4.3	3.73	5.39	6.4	3.40	4.83	5.8	3.08	4.24	5.1
	0.30	30.7	3.72	5.27	4.2	3.36	4.64	3.7	3.02	3.98	3.2	4.02	6.06	4.8	3.66	5.42	4.3	3.31	4.76	3.8
800	0.15	12.0	3.85	5.14	8.2	3.49	4.53	7.2	3.15	3.90	6.2	4.14	5.87	9.4	3.78	5.26	8.4	3.42	4.63	7.4
	0.20	19.7	4.16	5.71	6.8	3.76	5.03	6.0	3.39	4.32	5.2	4.48	6.54	7.8	4.08	5.86	7.0	3.70	5.15	6.2
	0.25	29.0	4.36	6.13	5.9	3.94	5.39	5.2	3.54	4.63	4.4	4.71	7.03	6.7	4.29	6.30	6.0	3.88	5.53	5.3
	0.30	39.7	4.50	6.46	5.1	4.07	5.68	4.5	3.65	4.87	3.9	4.87	7.42	5.9	4.43	6.64	5.3	4.01	5.83	4.6
1000	0.20	3.4	4.72	5.95	7.1	4.28	5.25	6.3	3.87	4.54	5.4	5.06	6.78	8.1	4.62	6.08	7.3	4.19	5.36	6.4
	0.30	6.9	5.34	7.01	5.6	4.84	6.18	4.9	4.37	5.32	4.2	5.76	8.01	6.4	5.24	7.18	5.7	4.75	6.32	5.0
	0.40	11.3	5.71	7.70	4.6	5.16	6.78	4.1	4.65	5.82	3.5	6.16	8.82	5.3	5.61	7.90	4.7	5.08	6.94	4.1
	0.50	16.6	5.94	8.19	3.9	5.37	7.21	3.4	4.82	6.19	3.0	6.42	9.41	4.5	5.84	8.42	4.0	5.28	7.39	3.5
1200	0.20	4.0	5.45	6.86	8.2	4.94	6.06	7.2	4.48	5.24	6.3	5.84	7.81	9.3	5.33	7.01	8.4	4.84	6.18	7.4
	0.30	8.1	6.22	8.15	6.5	5.63	7.19	5.7	5.09	6.19	4.9	6.69	9.31	7.4	6.10	8.35	6.6	5.53	7.34	5.9
	0.40	13.2	6.67	9.00	5.4	6.04	7.93	4.7	5.44	6.81	4.1	7.20	10.30	6.2	6.55	9.23	5.5	5.94	8.11	4.8
	0.50	19.5	6.97	9.61	4.6	6.30	8.46	4.0	5.67	7.26	3.5	7.52	11.02	5.3	6.85	9.87	4.7	6.20	8.67	4.1
1400	0.20	4.4	6.11	7.65	9.1	5.55	6.76	8.1	5.03	5.85	7.0	6.54	8.70	10.4	5.97	7.81	9.3	5.42	6.89	8.2
	0.30	8.9	7.04	9.17	7.3	6.38	8.09	6.4	5.77	6.98	5.6	7.56	10.46	8.3	6.89	9.38	7.5	6.26	8.26	6.6
	0.40	14.7	7.60	10.18	6.1	6.88	8.98	5.4	6.20	7.72	4.6	8.18	11.65	7.0	7.46	10.44	6.2	6.76	9.18	5.5
	0.55	25.4	8.11	11.22	4.9	7.33	9.88	4.3	6.60	8.48	3.7	8.75	12.87	5.6	7.97	11.52	5.0	7.21	10.12	4.4

HEATING Capacity

Unit Size	Water Flow (l/sec)	W.P.D (kPa)	Entering Air Condition DB=20.0°C										Entering Air Condition DB=22.0°C									
			Entering Water Temperature										Entering Water Temperature									
			40°C		50°C		60°C		70°C		80°C		40°C		50°C		60°C		70°C		80°C	
			TH (kW)	ΔWT (°C)	TH (kW)	ΔWT (°C)	TH (kW)	ΔWT (°C)	TH (kW)	ΔWT (°C)	TH (kW)	ΔWT (°C)	TH (kW)	ΔWT (°C)	TH (kW)	ΔWT (°C)	TH (kW)	ΔWT (°C)	TH (kW)	ΔWT (°C)	TH (kW)	ΔWT (°C)
300	0.05	0.8	1.99	9.5	2.99	14.3	3.99	19.1	4.99	23.9	5.99	28.6	1.79	8.6	2.79	13.4	3.79	18.1	4.79	22.9	5.79	27.7
	0.10	2.8	2.29	5.5	3.43	8.2	4.58	10.9	5.72	13.7	6.87	16.4	2.06	4.9	3.20	7.7	4.35	10.4	5.49	13.1	6.64	15.9
	0.15	5.6	2.41	3.8	3.62	5.8	4.83	7.7	6.04	9.6	7.24	11.5	2.17	3.5	3.38	5.4	4.59	7.3	5.80	9.2	7.00	11.2
	0.20	9.2	2.48	3.0	3.73	4.5	4.97	5.9	6.22	7.4	7.46	8.9	2.23	2.7	3.48	4.2	4.72	5.6	5.97	7.1	7.21	8.6
400	0.10	3.9	3.19	7.6	4.79	11.4	6.38	15.3	7.98	19.1	9.58	22.9	2.87	6.9	4.47	10.7	6.06	14.5	7.66	18.3	9.26	22.1
	0.15	8.0	3.43	5.5	5.14	8.2	6.86	10.9	8.58	13.7	10.29	16.4	3.08	4.9	4.80	7.7	6.52	10.4	8.23	13.1	9.95	15.9
	0.20	13.1	3.57	4.3	5.35	6.4	7.13	8.5	8.92	10.7	10.70	12.8	3.21	3.8	4.99	6.0	6.78	8.1	8.56	10.2	10.35	12.4
	0.25	19.3	3.66	3.5	5.49	5.2	7.32	7.0	9.15	8.7	10.98	10.5	3.29	3.1	5.12	4.9	6.95	6.6	8.78	8.4	10.61	10.1
600	0.10	4.6	3.77	9.0	5.66	13.5	7.54	18.0	9.43	22.5	11.32	27.0	3.39	8.1	5.28	12.6	7.16	17.1	9.05	21.6	10.94	26.1
	0.15	9.3	4.10	6.5	6.15	9.8	8.21	13.1	10.26	16.3	12.31	19.6	3.69	5.9	5.74	9.2	7.80	12.4	9.85	15.7	11.90	19.0
	0.20	15.2	4.30	5.1	6.45	7.7	8.60	10.3	10.75	12.8	12.90	15.4	3.87	4.6	6.02	7.2	8.17	9.8	10.32	12.3	12.47	14.9
	0.30	30.7	4.52	3.6	6.78	5.4	9.04	7.2	11.31	9.0	13.57	10.8	4.07	3.2	6.33	5.0	8.59	6.8	10.85	8.6	13.12	10.4
800	0.15	12.0	4.88	7.8	7.32	11.7	9.76	15.6	12.21	19.4	14.65	23.3	4.39	7.0	6.83	10.9	9.27	14.8	11.72	18.7	14.16	22.6
	0.20	19.7	5.15	6.2	7.73	9.2	10.30	12.3	12.88	15.4	15.46	18.5	4.63	5.5	7.21	8.6	9.79	11.7	12.37	14.8	14.94	17.9
	0.25	29.0	5.33	5.1	8.00	7.6	10.67	10.2	13.34	12.7	16.00	15.3	4.80	4.6	7.47	7.1	10.13	9.7	12.80	12.2	15.47	14.8
	0.30	39.7	5.46	4.4	8.20	6.5	10.93	8.7	13.66	10.9	16.40	13.1	4.92	3.9	7.65	6.1	10.38	8.3	13.12	10.4	15.85	12.6
1000	0.20	3.4	6.32	7.6	9.49	11.3	12.65	15.1	15.82	18.9	18.98	22.7	5.69	6.8	8.85	10.6	12.02	14.4	15.18	18.1	18.35	21.9
	0.30	6.9	6.79	5.4	10.19	8.1	13.59	10.8	16.99	13.5	20.39	16.2	6.11	4.9	9.51	7.6	12.91	10.3	16.31	13.0	19.71	15.7
	0.40	11.3	7.07	4.2	10.60	6.3	14.14	8.4	17.68	10.6	21.21	12.7	6.36	3.8	9.90	5.9	13.43	8.0	16.97	10.1	20.50	12.2
	0.50	16.6	7.25	3.5	10.88	5.2	14.50	6.9	18.13	8.7	21.76	10.4	6.52	3.1	10.15	4.9	13.78	6.6	17.41	8.3	21.03	10.1
1200	0.20	4.0	7.30	8.7	10.96	13.1	14.61	17.5	18.26	21.8	21.92	26.2	6.57	7.9	10.22	12.2	13.88	16.6	17.53	20.9	21.18	25.3
	0.30	8.1	7.93	6.3	11.89	9.5	15.86	12.6	19.82	15.8	23.79	18.9	7.13	5.7	11.10	8.8	15.07	12.0	19.03	15.2	23.00	18.3
	0.40	13.2	8.29	5.0	12.44	7.4	16.59	9.9	20.74	12.4	24.89	14.9	7.46	4.5	11.61	6.9	15.76	9.4	19.91	11.9	24.06	14.4
	0.50	19.5	8.54	4.1	12.81	6.1	17.08	8.2	21.35	10.2	25.63	12.2	7.68	3.7	11.96	5.7	16.23	7.8	20.50	9.8	24.77	11.8
1400	0.20	4.4	8.22	9.8	12.34	14.7	16.45	19.7	20.56	24.6	24.68	29.5	7.40	8.8	11.51	13.8	15.63	18.7	19.74	23.6	23.85	28.5
	0.30	8.9	9.02	7.2	13.53	10.8	18.04	14.4	22.55	18.0	27.06	21.6	8.11	6.5	12.62	10.1	17.14	13.6	21.65	17.2	26.16	20.8
	0.40	14.7	9.49	5.7	14.24	8.5	18.98	11.3	23.73	14.2	28.48	17.0	8.54	5.1	13.29	7.9	18.03	10.8	22.78	13.6	27.53	16.4
	0.55	25.4	9.93	4.3	14.90	6.5	19.87	8.6	24.83	10.8	29.80	12.9	8.94	3.9	13.90	6.0	18.87	8.2	23.84	10.4	28.81	12.5

Note:To obtain accurate air volume and cooling/heating capacities,refer to pages 54-74

◀ 37
38

Ceiling Recessed Model-High Static Model 4-Row Cooling/Heating

SRC-2HW-4R 220V

COOLING Capacity

Unit Size	Water Flow (l/sec)	W.P.D (kPa)	Entering Air Condition DB=24.0°C WB=17.8°C (55%)									Entering Air Condition DB=26.0°C WB=19.5°C (55%)								
			Entering Water Temperature									Entering Water Temperature								
			5°C			7°C			9°C			5°C			7°C			9°C		
			SH (kW)	TH (kW)	ΔWT (°C)	SH (kW)	TH (kW)	ΔWT (°C)	SH (kW)	TH (kW)	ΔWT (°C)	SH (kW)	TH (kW)	ΔWT (°C)	SH (kW)	TH (kW)	ΔWT (°C)	SH (kW)	TH (kW)	ΔWT (°C)
300	0.05	0.5	1.28	1.57	7.5	1.16	1.39	6.7	1.06	1.20	5.8	1.37	1.79	8.6	1.25	1.60	7.7	1.14	1.41	6.8
	0.10	1.7	1.74	2.28	5.5	1.58	2.01	4.8	1.42	1.73	4.1	1.88	2.61	6.3	1.71	2.34	5.6	1.55	2.06	4.9
	0.15	3.4	1.96	2.67	4.3	1.77	2.35	3.7	1.59	2.02	3.2	2.12	3.06	4.9	1.93	2.74	4.4	1.74	2.41	3.8
	0.20	5.6	2.08	2.92	3.5	1.88	2.57	3.1	1.68	2.20	2.6	2.25	3.35	4.0	2.04	3.00	3.6	1.85	2.63	3.2
400	0.10	2.4	2.41	3.18	7.6	2.19	2.80	6.7	1.97	2.42	5.8	2.59	3.63	8.7	2.36	3.25	7.8	2.14	2.86	6.8
	0.15	4.8	2.73	3.75	6.0	2.47	3.31	5.3	2.23	2.84	4.5	2.95	4.30	6.9	2.68	3.85	6.1	2.43	3.38	5.4
	0.20	8.0	2.92	4.13	4.9	2.64	3.64	4.3	2.37	3.12	3.7	3.15	4.74	5.7	2.87	4.25	5.1	2.60	3.73	4.5
	0.25	11.7	3.04	4.40	4.2	2.74	3.87	3.7	2.46	3.32	3.2	3.29	5.06	4.8	2.99	4.53	4.3	2.70	3.97	3.8
600	0.10	2.8	2.86	3.74	8.9	2.59	3.30	7.9	2.34	2.85	6.8	3.07	4.26	10.2	2.80	3.82	9.1	2.54	3.37	8.1
	0.15	5.6	3.28	4.48	7.1	2.97	3.95	6.3	2.68	3.39	5.4	3.54	5.12	8.2	3.22	4.59	7.3	2.92	4.04	6.4
	0.20	9.3	3.54	4.97	5.9	3.20	4.37	5.2	2.88	3.75	4.5	3.82	5.70	6.8	3.48	5.10	6.1	3.15	4.48	5.4
	0.30	18.7	3.82	5.60	4.5	3.45	4.93	3.9	3.09	4.22	3.4	4.13	6.44	5.1	3.76	5.77	4.6	3.40	5.06	4.0
800	0.15	7.3	4.05	5.54	8.8	3.67	4.89	7.8	3.31	4.20	6.7	4.36	6.33	10.1	3.97	5.68	9.0	3.60	4.99	8.0
	0.20	12.0	4.40	6.20	7.4	3.98	5.46	6.5	3.58	4.69	5.6	4.75	7.11	8.5	4.32	6.37	7.6	3.91	5.59	6.7
	0.25	17.6	4.63	6.69	6.4	4.19	5.89	5.6	3.76	5.05	4.8	5.01	7.68	7.3	4.56	6.88	6.6	4.12	6.04	5.8
	0.30	24.1	4.80	7.07	5.6	4.34	6.22	5.0	3.89	5.33	4.2	5.19	8.13	6.5	4.73	7.27	5.8	4.27	6.38	5.1
1000	0.20	2.1	4.79	6.22	7.4	4.34	5.49	6.6	3.92	4.73	5.7	5.15	7.10	8.5	4.69	6.37	7.6	4.26	5.61	6.7
	0.30	4.2	5.46	7.39	5.9	4.94	6.51	5.2	4.45	5.60	4.5	5.89	8.47	6.7	5.37	7.58	6.0	4.86	6.67	5.3
	0.40	6.9	5.86	8.16	4.9	5.29	7.18	4.3	4.76	6.16	3.7	6.33	9.36	5.6	5.76	8.39	5.0	5.21	7.36	4.4
	0.50	10.1	6.11	8.71	4.2	5.52	7.66	3.7	4.95	6.57	3.1	6.61	10.02	4.8	6.01	8.97	4.3	5.44	7.87	3.8
1200	0.20	2.4	5.68	7.33	8.8	5.15	6.47	7.7	4.66	5.59	6.7	6.08	8.35	10.0	5.55	7.49	9.0	5.04	6.60	7.9
	0.30	4.9	6.55	8.81	7.0	5.94	7.77	6.2	5.36	6.69	5.3	7.05	10.07	8.0	6.43	9.03	7.2	5.83	7.94	6.3
	0.40	8.1	7.08	9.80	5.9	6.41	8.64	5.2	5.77	7.42	4.4	7.63	11.23	6.7	6.95	10.06	6.0	6.30	8.84	5.3
	0.50	11.8	7.42	10.53	5.0	6.71	9.26	4.4	6.04	7.95	3.8	8.02	12.07	5.8	7.30	10.81	5.2	6.60	9.50	4.5
1400	0.20	2.7	6.22	8.02	9.6	5.65	7.09	8.5	5.12	6.13	7.3	6.67	9.13	10.9	6.08	8.20	9.8	5.53	7.23	8.6
	0.30	5.4	7.24	9.71	7.7	6.56	8.57	6.8	5.92	7.38	5.9	7.78	11.10	8.8	7.09	9.95	7.9	6.44	8.76	7.0
	0.40	8.9	7.85	10.86	6.5	7.11	9.56	5.7	6.40	8.22	4.9	8.46	12.43	7.4	7.71	11.14	6.7	6.99	9.79	5.8
	0.55	15.5	8.42	12.03	5.2	7.61	10.59	4.6	6.84	9.08	3.9	9.09	13.81	6.0	8.28	12.37	5.4	7.49	10.86	4.7

HEATING Capacity

Unit Size	Water Flow (l/sec)	W.P.D (kPa)	Entering Air Condition DB=20.0°C										Entering Air Condition DB=22.0°C									
			Entering Water Temperature										Entering Water Temperature									
			40°C		50°C		60°C		70°C		80°C		40°C		50°C		60°C		70°C		80°C	
			TH (kW)	ΔWT (°C)	TH (kW)	ΔWT (°C)	TH (kW)	ΔWT (°C)	TH (kW)	ΔWT (°C)	TH (kW)	ΔWT (°C)	TH (kW)	ΔWT (°C)	TH (kW)	ΔWT (°C)	TH (kW)	ΔWT (°C)	TH (kW)	ΔWT (°C)	TH (kW)	ΔWT (°C)
300	0.05	0.5	2.09	10.0	3.14	15.0	4.19	20.0	5.23	25.0	6.28	30.0	1.88	9.0	2.93	14.0	3.98	19.0	5.02	24.0	6.07	29.0
	0.10	1.7	2.41	5.8	3.61	8.6	4.82	11.5	6.03	14.4	7.23	17.3	2.17	5.2	3.37	8.1	4.58	11.0	5.79	13.8	6.99	16.7
	0.15	3.4	2.54	4.1	3.81	6.1	5.09	8.1	6.36	10.1	7.63	12.2	2.29	3.6	3.56	5.7	4.83	7.7	6.11	9.7	7.38	11.8
	0.20	5.6	2.62	3.1	3.93	4.7	5.24	6.3	6.55	7.8	7.86	9.4	2.35	2.8	3.67	4.4	4.98	5.9	6.29	7.5	7.60	9.1
400	0.10	2.4	3.31	7.9	4.97	11.9	6.63	15.9	8.29	19.8	9.95	23.8	2.98	7.1	4.64	11.1	6.30	15.1	7.96	19.0	9.62	23.0
	0.15	4.8	3.56	5.7	5.35	8.5	7.13	11.4	8.92	14.2	10.70	17.1	3.21	5.1	4.99	8.0	6.78	10.8	8.56	13.6	10.34	16.5
	0.20	8.0	3.71	4.4	5.56	6.6	7.42	8.9	9.27	11.1	11.13	13.3	3.34	4.0	5.19	6.2	7.05	8.4	8.90	10.6	10.76	12.9
	0.25	11.7	3.80	3.6	5.70	5.5	7.61	7.3	9.51	9.1	11.41	10.9	3.42	3.3	5.32	5.1	7.23	6.9	9.13	8.7	11.03	10.5
600	0.10	2.8	3.93	9.4	5.90	14.1	7.87	18.8	9.84	23.5	11.81	28.2	3.54	8.5	5.51	13.2	7.48	17.9	9.45	22.6	11.42	27.3
	0.15	5.6	4.29	6.8	6.43	10.3	8.58	13.7	10.73	17.1	12.87	20.5	3.86	6.2	6.00	9.6	8.15	13.0	10.30	16.4	12.44	19.8
	0.20	9.3	4.49	5.4	6.74	8.1	8.99	10.7	11.24	13.4	13.49	16.1	4.04	4.8	6.29	7.5	8.54	10.2	10.79	12.9	13.04	15.6
	0.30	18.7	4.73	3.8	7.09	5.7	9.46	7.5	11.82	9.4	14.19	11.3	4.25	3.4	6.62	5.3	8.98	7.2	11.35	9.0	13.72	10.9
800	0.15	7.3	5.28	8.4	7.92	12.6	10.56	16.8	13.20	21.0	15.85	25.2	4.75	7.6	7.39	11.8	10.03	16.0	12.68	20.2	15.32	24.4
	0.20	12.0	5.59	6.7	8.38	10.0	11.18	13.4	13.98	16.7	16.77	20.0	5.03	6.0	7.83	9.4	10.62	12.7	13.42	16.0	16.22	19.4
	0.25	17.6	5.79	5.5	8.70	8.3	11.60	11.1	14.50	13.9	17.40	16.6	5.22	5.0	8.12	7.8	11.02	10.5	13.92	13.3	16.82	16.1
	0.30	24.1	5.94	4.7	8.92	7.1	11.89	9.5	14.87	11.8	17.84	14.2	5.35	4.3	8.32	6.6	11.30	9.0	14.27	11.4	17.25	13.7
1000	0.20	2.1	6.63	7.9	9.95	11.9	13.27	15.9	16.58	19.8	19.90	23.8	5.97	7.1	9.28	11.1	12.60	15.1	15.92	19.0	19.24	23.0
	0.30	4.2	7.13	5.7	10.70	8.5	14.27	11.4	17.84	14.2	21.41	17.1	6.42	5.1	9.99	8.0	13.56	10.8	17.13	13.6	20.69	16.5
	0.40	6.9	7.42	4.4	11.13	6.7	14.85	8.9	18.56	11.1	22.27	13.3	6.68	4.0	10.39	6.2	14.11	8.4	17.82	10.6	21.53	12.9
	0.50	10.1	7.61	3.6	11.42	5.5	15.23	7.3	19.04	9.1	22.84	10.9	6.85	3.3	10.66	5.1	14.47	6.9	18.27	8.7	22.08	10.6
1200	0.20	2.4	7.92	9.5	11.89	14.2	15.85	18.9	19.81	23.7	23.78	28.4	7.13	8.5	11.09	13.3	15.06	18.0	19.02	22.7	22.98	27.5
	0.30	4.9	8.64	6.9	12.97	10.3	17.29	13.8	21.61	17.2	25.94	20.7	7.78	6.2	12.10	9.6	16.43	13.1	20.75	16.5	25.07	20.0
	0.40	8.1	9.06	5.4	13.60	8.1	18.13	10.8	22.67	13.5	27.20	16.2	8.16	4.9	12.69	7.6	17.23	10.3	21.76	13.0	26.30	15.7
	0.50	11.8	9.34	4.5	14.02	6.7	18.69	8.9	23.37	11.2	28.04	13.4	8.41	4.0	13.08	6.3	17.76	8.5	22.43	10.7	27.11	13.0
1400	0.20	2.7	8.69	10.4	13.03	15.6	17.38	20.8	21.72	26.0	26.07	31.1	7.82	9.3	12.16	14.5	16.51	19.7	20.85	24.9	25.20	30.1
	0.30	5.4	9.55	7.6	14.33	11.4	19.11	15.2	23.89	19.0	28.67	22.8	8.60	6.9	13.38	10.7	18.16	14.5	22.94	18.3	27.72	22.1
	0.40	8.9	10.07	6.0	15.10	9.0	20.14	12.0	25.18	15.0	30.21	18.0	9.06	5.4	14.10	8.4	19.13	11.4	24.17	14.4	29.21	17.4
	0.55	15.5	10.54	4.6	15.82	6.9	21.09	9.2	26.37	11.5	31.64	13.7	9.49	4.1	14.76	6.4	20.04	8.7	25.31	11.0	30.59	13.3

Note:To obtain accurate air volume and cooling/heating capacities,refer to pages 54-74

Ceiling Recessed Model-High Static Model 2-Row Cooling, 1-Row Heating

SRC-2HW-DC1 220V

COOLING Capacity

Unit Size	Water Flow (l/sec)	W.P.D (kPa)	Entering Air Condition DB=24.0°C WB=17.8°C (55%)									Entering Air Condition DB=26.0°C WB=19.5°C (55%)								
			Entering Water Temperature									Entering Water Temperature								
			5°C			7°C			9°C			5°C			7°C			9°C		
			SH (kW)	TH (kW)	ΔWT (°C)	SH (kW)	TH (kW)	ΔWT (°C)	SH (kW)	TH (kW)	ΔWT (°C)	SH (kW)	TH (kW)	ΔWT (°C)	SH (kW)	TH (kW)	ΔWT (°C)	SH (kW)	TH (kW)	ΔWT (°C)
300	0.03	0.8	0.96	1.07	7.8	0.87	0.95	6.9	0.80	0.83	6.0	1.02	1.21	8.8	0.93	1.08	7.9	0.85	0.96	7.0
	0.07	2.8	1.33	1.58	5.7	1.21	1.40	5.0	1.10	1.21	4.3	1.42	1.80	6.4	1.30	1.61	5.8	1.18	1.42	5.1
	0.10	5.6	1.51	1.86	4.4	1.36	1.64	3.9	1.23	1.41	3.4	1.62	2.12	5.1	1.48	1.90	4.5	1.34	1.67	4.0
	0.15	11.2	1.64	2.10	3.4	1.49	1.85	3.0	1.34	1.60	2.5	1.77	2.41	3.8	1.61	2.16	3.4	1.46	1.90	3.0
400	0.07	4.0	1.86	2.22	7.9	1.69	1.96	7.0	1.53	1.70	6.1	1.99	2.52	9.0	1.81	2.26	8.1	1.65	1.99	7.1
	0.10	8.0	2.13	2.63	6.3	1.93	2.33	5.6	1.75	2.01	4.8	2.28	3.00	7.2	2.08	2.69	6.4	1.89	2.37	5.7
	0.15	16.1	2.35	3.02	4.8	2.13	2.67	4.3	1.92	2.30	3.7	2.53	3.46	5.5	2.31	3.10	4.9	2.09	2.73	4.3
	0.20	26.4	2.47	3.27	3.9	2.24	2.88	3.4	2.01	2.48	3.0	2.67	3.75	4.5	2.43	3.36	4.0	2.20	2.95	3.5
600	0.07	4.6	2.17	2.58	9.2	1.98	2.29	8.2	1.80	1.99	7.1	2.32	2.93	10.5	2.12	2.63	9.4	1.93	2.32	8.3
	0.10	9.3	2.52	3.11	7.4	2.29	2.75	6.6	2.07	2.37	5.7	2.70	3.54	8.5	2.47	3.17	7.6	2.24	2.80	6.7
	0.15	18.7	2.81	3.60	5.7	2.55	3.18	5.1	2.30	2.74	4.4	3.03	4.12	6.6	2.76	3.69	5.9	2.50	3.25	5.2
	0.20	30.7	2.98	3.92	4.7	2.70	3.46	4.1	2.43	2.97	3.6	3.21	4.49	5.4	2.93	4.02	4.8	2.65	3.54	4.2
800	0.07	6.0	2.58	3.09	11.0	2.34	2.73	9.8	2.13	2.37	8.5	2.75	3.50	12.5	2.51	3.14	11.2	2.29	2.78	9.9
	0.10	12.0	3.01	3.75	9.0	2.73	3.31	7.9	2.48	2.86	6.8	3.23	4.26	10.2	2.94	3.82	9.1	2.67	3.37	8.1
	0.15	24.1	3.39	4.38	7.0	3.07	3.86	6.2	2.77	3.33	5.3	3.65	5.00	8.0	3.32	4.49	7.2	3.01	3.95	6.3
	0.20	39.7	3.61	4.80	5.7	3.27	4.23	5.1	2.94	3.63	4.3	3.89	5.49	6.6	3.55	4.92	5.9	3.21	4.33	5.2
1000	0.10	2.1	3.20	3.68	8.8	2.91	3.26	7.8	2.66	2.84	6.8	3.41	4.16	9.9	3.11	3.74	8.9	2.83	3.31	7.9
	0.20	6.9	4.19	5.12	6.1	3.80	4.52	5.4	3.44	3.91	4.7	4.49	5.83	7.0	4.10	5.23	6.3	3.72	4.61	5.5
	0.30	13.8	4.63	5.89	4.7	4.20	5.19	4.1	3.79	4.48	3.6	4.99	6.73	5.4	4.55	6.03	4.8	4.12	5.31	4.2
	0.40	22.8	4.88	6.38	3.8	4.42	5.62	3.4	3.98	4.83	2.9	5.27	7.31	4.4	4.80	6.55	3.9	4.34	5.75	3.4
1200	0.10	2.4	3.66	4.21	10.1	3.33	3.73	8.9	3.04	3.25	7.8	3.89	4.75	11.4	3.56	4.27	10.2	3.24	3.78	9.0
	0.20	8.1	4.86	5.94	7.1	4.41	5.25	6.3	4.00	4.54	5.4	5.21	6.76	8.1	4.75	6.06	7.2	4.31	5.35	6.4
	0.30	16.2	5.42	6.88	5.5	4.91	6.07	4.8	4.44	5.23	4.2	5.83	7.86	6.3	5.31	7.04	5.6	4.82	6.20	4.9
	0.45	32.8	5.84	7.72	4.1	5.29	6.80	3.6	4.76	5.84	3.1	6.31	8.84	4.7	5.74	7.92	4.2	5.20	6.96	3.7
1400	0.10	2.7	4.05	4.63	11.1	3.69	4.11	9.8	3.38	3.59	8.6	4.31	5.23	12.5	3.94	4.70	11.2	3.59	4.16	10.0
	0.20	8.9	5.47	6.64	7.9	4.96	5.88	7.0	4.51	5.09	6.1	5.85	7.55	9.0	5.34	6.78	8.1	4.85	5.98	7.2
	0.30	18.0	6.15	7.76	6.2	5.57	6.85	5.5	5.04	5.91	4.7	6.61	8.85	7.1	6.02	7.94	6.3	5.46	6.99	5.6
	0.45	36.2	6.68	8.76	4.7	6.04	7.72	4.1	5.45	6.65	3.5	7.20	10.03	5.3	6.56	8.99	4.8	5.94	7.90	4.2

◀39·40

HEATING Capacity

Unit Size	Water Flow (l/sec)	W.P.D (kPa)	Entering Air Condition DB=20.0°C										Entering Air Condition DB=22.0°C									
			Entering Water Temperature										Entering Water Temperature									
			40°C		50°C		60°C		70°C		80°C		40°C		50°C		60°C		70°C		80°C	
			TH (kW)	ΔWT (°C)	TH (kW)	ΔWT (°C)	TH (kW)	ΔWT (°C)	TH (kW)	ΔWT (°C)	TH (kW)	ΔWT (°C)	TH (kW)	ΔWT (°C)	TH (kW)	ΔWT (°C)	TH (kW)	ΔWT (°C)	TH (kW)	ΔWT (°C)	TH (kW)	ΔWT (°C)
300	0.03	2.3	1.01	8.1	1.51	12.1	2.02	16.1	2.53	20.2	3.03	24.2	0.91	7.3	1.41	11.3	1.92	15.3	2.42	19.3	2.93	23.4
	0.05	5.6	1.11	5.3	1.67	8.0	2.23	10.7	2.78	13.3	3.34	16.0	1.00	4.8	1.56	7.5	2.11	10.1	2.67	12.8	3.23	15.5
	0.08	12.6	1.18	3.6	1.78	5.3	2.37	7.1	2.97	8.9	3.56	10.7	1.07	3.2	1.66	5.0	2.26	6.7	2.85	8.5	3.45	10.3
	0.10	18.5	1.21	2.9	1.82	4.4	2.43	5.8	3.04	7.3	3.65	8.7	1.09	2.6	1.70	4.1	2.31	5.5	2.92	7.0	3.53	8.4
400	0.03	3.3	1.37	11.0	2.06	16.5	2.75	22.0	3.44	27.5	4.13	32.9	1.24	9.9	1.93	15.4	2.62	20.9	3.31	26.4	3.99	31.9
	0.05	8.0	1.56	7.5	2.35	11.2	3.13	15.0	3.91	18.7	4.70	22.5	1.41	6.7	2.19	10.5	2.97	14.2	3.76	18.0	4.54	21.7
	0.08	18.0	1.70	5.1	2.56	7.6	3.41	10.2	4.26	12.7	5.12	15.3	1.53	4.6	2.38	7.1	3.24	9.7	4.09	12.2	4.95	14.8
	0.10	26.4	1.76	4.2	2.64	6.3	3.52	8.4	4.40	10.5	5.28	12.6	1.58	3.8	2.46	5.9	3.34	8.0	4.22	10.1	5.11	12.2
600	0.03	3.8	1.59	12.7	2.38	19.0	3.18	25.3	3.97	31.7	4.77	38.0	1.43	11.4	2.22	17.7	3.02	24.1	3.81	30.4	4.61	36.7
	0.05	9.3	1.84	8.8	2.76	13.2	3.68	17.6	4.60	22.0	5.52	26.4	1.65	7.9	2.57	12.3	3.50	16.7	4.42	21.1	5.34	25.5
	0.08	20.9	2.03	6.1	3.04	9.1	4.06	12.1	5.08	15.2	6.09	18.2	1.82	5.5	2.84	8.5	3.86	11.5	4.87	14.6	5.89	17.6
	0.10	30.7	2.10	5.0	3.16	7.6	4.21	10.1	5.27	12.6	6.32	15.1	1.89	4.5	2.95	7.1	4.00	9.6	5.06	12.1	6.11	14.6
800	0.03	4.9	1.85	14.7	2.77	22.1	3.70	29.5	4.62	36.8	5.55	44.2	1.66	13.3	2.59	20.6	3.51	28.0	4.44	35.4	5.36	42.7
	0.05	12.0	2.19	10.5	3.28	15.7	4.38	21.0	5.48	26.2	6.57	31.4	1.97	9.4	3.06	14.7	4.16	19.9	5.26	25.1	6.35	30.4
	0.08	27.0	2.45	7.3	3.68	11.0	4.91	14.7	6.14	18.4	7.37	22.0	2.21	6.6	3.44	10.3	4.67	13.9	5.90	17.6	7.12	21.3
	0.10	39.7	2.56	6.1	3.84	9.2	5.13	12.3	6.41	15.3	7.69	18.4	2.30	5.5	3.59	8.6	4.87	11.6	6.15	14.7	7.44	17.8
1000	0.03	5.6	2.12	16.9	3.19	25.4	4.25	33.9	5.32	42.4	6.38	50.8	1.91	15.3	2.97	23.7	4.04	32.2	5.10	40.7	6.17	49.1
	0.05	13.6	2.59	12.4	3.88	18.6	5.18	24.8	6.47	30.9	7.77	37.1	2.33	11.1	3.62	17.3	4.92	23.5	6.21	29.7	7.51	35.9
	0.08	30.6	2.96	8.9	4.44	13.3	5.92	17.7	7.41	22.1	8.89	26.6	2.66	8.0	4.15	12.4	5.63	16.8	7.11	21.2	8.59	25.7
	0.10	45.1	3.12	7.5	4.68	11.2	6.24	14.9	7.80	18.6	9.36	22.4	2.80	6.7	4.36	10.4	5.92	14.2	7.48	17.9	9.04	21.6
1200	0.03	6.6	2.35	18.7	3.52	28.1	4.70	37.4	5.87	46.8	7.05	56.2	2.11	16.8	3.29	26.2	4.46	35.6	5.64	44.9	6.81	54.3
	0.05	16.0	2.92	14.0	4.38	20.9	5.84	27.9	7.30	34.9	8.76	41.9	2.62	12.6	4.09	19.5	5.55	26.5	7.01	33.5	8.47	40.5
	0.08	36.0	3.39	10.2	5.09	15.2	6.79	20.3	8.49	25.4	10.19	30.5	3.05	9.1	4.75	14.2	6.45	19.3	8.15	24.4	9.85	29.4
	0.09	44.2	3.50	9.3	5.26	14.0	7.01	18.6	8.77	23.3	10.52	27.9	3.15	8.4	4.91	13.0	6.66	17.7	8.42	22.4	10.17	27.0
1400	0.03	7.3	2.53	20.2	3.79	30.2	5.06	40.3	6.33	50.4	7.59	60.5	2.27	18.1	3.54	28.2	4.81	38.3	6.07	48.4	7.34	58.5
	0.05	17.7	3.20	15.3	4.80	23.0	6.40	30.6	8.00	38.3	9.61	45.9	2.88	13.8	4.48	21.4	6.08	29.1	7.68	36.7	9.29	44.4
	0.08	39.9	3.78	11.3	5.67	16.9	7.56	22.6	9.45	28.2	11.34	33.9	3.40	10.2	5.29	15.8	7.18	21.5	9.07	27.1	10.96	32.8
	0.09	48.9	3.91	10.4	5.87	15.6	7.83	20.8	9.79	26.0	11.74	31.2	3.52	9.4	5.48	14.6	7.44	19.8	9.39	24.9	11.35	30.1

Note:To obtain accurate air volume and cooling/heating capacities,refer to pages 54-74

Ceiling Recessed Model-High Static Model 3-Row Cooling, 1-Row Heating

SRC-2HW-DC2 220V

COOLING Capacity

Unit Size	Water Flow (l/sec)	W.P.D (kPa)	Entering Air Condition DB=24.0°C WB=17.8°C (55%)									Entering Air Condition DB=26.0°C WB=19.5°C (55%)								
			Entering Water Temperature									Entering Water Temperature								
			5°C			7°C			9°C			5°C			7°C			9°C		
			SH (kW)	TH (kW)	ΔWT (°C)	SH (kW)	TH (kW)	ΔWT (°C)	SH (kW)	TH (kW)	ΔWT (°C)	SH (kW)	TH (kW)	ΔWT (°C)	SH (kW)	TH (kW)	ΔWT (°C)	SH (kW)	TH (kW)	ΔWT (°C)
300	0.05	0.8	1.24	1.49	7.1	1.13	1.32	6.3	1.02	1.14	5.5	1.33	1.69	8.1	1.21	1.52	7.3	1.10	1.34	6.4
	0.10	2.8	1.64	2.10	5.0	1.49	1.85	4.4	1.34	1.60	3.8	1.77	2.41	5.8	1.61	2.16	5.2	1.46	1.89	4.5
	0.15	5.6	1.82	2.43	3.9	1.65	2.14	3.4	1.48	1.83	2.9	1.97	2.79	4.4	1.79	2.50	4.0	1.62	2.19	3.5
	0.20	9.2	1.92	2.64	3.2	1.74	2.32	2.8	1.56	1.99	2.4	2.08	3.03	3.6	1.89	2.71	3.2	1.71	2.38	2.8
400	0.10	3.9	2.29	2.94	7.0	2.07	2.60	6.2	1.87	2.24	5.4	2.46	3.36	8.0	2.24	3.01	7.2	2.03	2.65	6.3
	0.15	8.0	2.57	3.44	5.5	2.32	3.03	4.8	2.09	2.60	4.2	2.77	3.94	6.3	2.52	3.53	5.6	2.28	3.10	4.9
	0.20	13.1	2.73	3.76	4.5	2.46	3.31	4.0	2.21	2.84	3.4	2.95	4.32	5.2	2.68	3.87	4.6	2.43	3.39	4.1
	0.25	19.3	2.83	3.99	3.8	2.55	3.51	3.4	2.29	3.01	2.9	3.06	4.59	4.4	2.78	4.11	3.9	2.52	3.60	3.4
600	0.10	4.6	2.71	3.47	8.3	2.46	3.06	7.3	2.22	2.64	6.3	2.91	3.96	9.5	2.66	3.55	8.5	2.41	3.13	7.5
	0.15	9.3	3.08	4.10	6.5	2.79	3.62	5.8	2.51	3.11	5.0	3.32	4.70	7.5	3.02	4.21	6.7	2.74	3.70	5.9
	0.20	15.2	3.30	4.52	5.4	2.98	3.98	4.8	2.68	3.41	4.1	3.56	5.18	6.2	3.24	4.64	5.6	2.93	4.08	4.9
	0.30	30.7	3.53	5.05	4.0	3.19	4.44	3.5	2.86	3.80	3.0	3.83	5.81	4.6	3.48	5.20	4.1	3.15	4.56	3.6
800	0.15	12.0	3.82	5.10	8.1	3.45	4.49	7.2	3.12	3.87	6.2	4.11	5.83	9.3	3.74	5.22	8.3	3.39	4.60	7.3
	0.20	19.7	4.12	5.66	6.8	3.72	4.99	6.0	3.35	4.28	5.1	4.44	6.49	7.8	4.04	5.81	6.9	3.66	5.11	6.1
	0.25	29.0	4.32	6.08	5.8	3.90	5.35	5.1	3.50	4.59	4.4	4.67	6.97	6.7	4.25	6.25	6.0	3.84	5.48	5.2
	0.30	39.7	4.46	6.40	5.1	4.02	5.63	4.5	3.61	4.82	3.8	4.82	7.35	5.9	4.39	6.58	5.2	3.97	5.77	4.6
1000	0.20	3.4	4.53	5.75	6.9	4.10	5.08	6.1	3.71	4.38	5.2	4.87	6.57	7.8	4.44	5.89	7.0	4.03	5.18	6.2
	0.30	6.9	5.10	6.74	5.4	4.62	5.94	4.7	4.16	5.11	4.1	5.51	7.72	6.2	5.01	6.92	5.5	4.54	6.08	4.8
	0.40	11.3	5.43	7.39	4.4	4.91	6.50	3.9	4.42	5.58	3.3	5.87	8.48	5.1	5.35	7.60	4.5	4.84	6.67	4.0
	0.50	16.6	5.64	7.85	3.8	5.10	6.91	3.3	4.58	5.92	2.8	6.11	9.03	4.3	5.56	8.08	3.9	5.03	7.09	3.4
1200	0.20	4.0	5.38	6.80	8.1	4.89	6.01	7.2	4.42	5.19	6.2	5.78	7.75	9.3	5.27	6.95	8.3	4.78	6.12	7.3
	0.30	8.1	6.14	8.06	6.4	5.56	7.11	5.7	5.02	6.12	4.9	6.61	9.22	7.3	6.02	8.26	6.6	5.46	7.27	5.8
	0.40	13.2	6.58	8.90	5.3	5.96	7.84	4.7	5.36	6.73	4.0	7.10	10.20	6.1	6.47	9.13	5.5	5.86	8.02	4.8
	0.50	19.5	6.87	9.50	4.5	6.21	8.36	4.0	5.58	7.17	3.4	7.43	10.90	5.2	6.76	9.76	4.7	6.12	8.57	4.1
1400	0.20	4.4	5.91	7.46	8.9	5.37	6.59	7.9	4.86	5.69	6.8	6.34	8.49	10.1	5.78	7.62	9.1	5.25	6.71	8.0
	0.30	8.9	6.79	8.90	7.1	6.15	7.85	6.3	5.55	6.76	5.4	7.30	10.17	8.1	6.66	9.11	7.3	5.46	6.99	5.6
	0.40	14.7	7.31	9.86	5.9	6.61	8.69	5.2	5.96	7.47	4.5	7.88	11.29	6.7	7.18	10.12	6.0	5.82	7.65	4.6
	0.55	25.4	7.78	10.84	4.7	7.03	9.54	4.1	6.32	8.18	3.6	8.41	12.45	5.4	7.65	11.15	4.8	6.13	8.31	3.6

HEATING Capacity

Unit Size	Water Flow (l/sec)	W.P.D (kPa)	Entering Air Condition DB=20.0°C										Entering Air Condition DB=22.0°C									
			Entering Water Temperature										Entering Water Temperature									
			40°C		50°C		60°C		70°C		80°C		40°C		50°C		60°C		70°C		80°C	
			TH (kW)	ΔWT (°C)	TH (kW)	ΔWT (°C)	TH (kW)	ΔWT (°C)	TH (kW)	ΔWT (°C)	TH (kW)	ΔWT (°C)	TH (kW)	ΔWT (°C)	TH (kW)	ΔWT (°C)	TH (kW)	ΔWT (°C)	TH (kW)	ΔWT (°C)	TH (kW)	ΔWT (°C)
300	0.03	2.3	0.97	7.8	1.46	11.7	1.95	15.6	2.44	19.4	2.92	23.3	0.87	7.0	1.36	10.9	1.85	14.8	2.34	18.7	2.83	22.6
	0.05	5.6	1.07	5.1	1.60	7.7	2.14	10.2	2.68	12.8	3.21	15.4	0.96	4.6	1.50	7.2	2.03	9.7	2.57	12.3	3.10	14.9
	0.08	12.6	1.14	3.4	1.71	5.1	2.28	6.8	2.85	8.5	3.42	10.2	1.02	3.1	1.59	4.8	2.16	6.5	2.73	8.2	3.30	9.9
	0.10	18.5	1.16	2.8	1.75	4.2	2.33	5.6	2.91	7.0	3.50	8.4	1.05	2.5	1.63	3.9	2.21	5.3	2.80	6.7	3.38	8.1
400	0.03	3.3	1.32	10.6	1.99	15.9	2.65	21.2	3.32	26.4	3.98	31.7	1.19	9.5	1.85	14.8	2.52	20.1	3.18	25.4	3.85	30.7
	0.05	8.0	1.50	7.2	2.25	10.8	3.00	14.4	3.75	17.9	4.50	21.5	1.35	6.5	2.10	10.0	2.85	13.6	3.60	17.2	4.35	20.8
	0.08	18.0	1.62	4.9	2.44	7.3	3.25	9.7	4.07	12.2	4.88	14.6	1.46	4.4	2.28	6.8	3.09	9.2	3.91	11.7	4.72	14.1
	0.10	26.4	1.68	4.0	2.52	6.0	3.36	8.0	4.20	10.0	5.04	12.0	1.51	3.6	2.35	5.6	3.19	7.6	4.03	9.6	4.87	11.6
600	0.03	3.8	1.53	12.3	2.30	18.4	3.07	24.5	3.84	30.6	4.61	36.8	1.38	11.0	2.15	17.2	2.92	23.3	3.69	29.4	4.46	35.5
	0.05	9.3	1.77	8.5	2.65	12.7	3.54	16.9	4.43	21.2	5.31	25.4	1.59	7.6	2.48	11.9	3.36	16.1	4.25	20.3	5.14	24.6
	0.08	20.9	1.94	5.8	2.92	8.7	3.89	11.6	4.87	14.5	5.84	17.5	1.75	5.2	2.72	8.1	3.70	11.1	4.67	14.0	5.65	16.9
	0.10	30.7	2.01	4.8	3.02	7.2	4.03	9.6	5.04	12.1	6.05	14.5	1.81	4.3	2.82	6.8	3.83	9.2	4.84	11.6	5.85	14.0
800	0.03	4.9	1.83	14.6	2.75	21.9	3.67	29.3	4.59	36.6	5.50	43.9	1.65	13.2	2.57	20.5	3.48	27.8	4.40	35.1	5.32	42.4
	0.05	12.0	2.17	10.4	3.26	15.6	4.34	20.8	5.43	26.0	6.52	31.2	1.95	9.3	3.04	14.5	4.12	19.7	5.21	24.9	6.30	30.1
	0.08	27.0	2.43	7.3	3.65	10.9	4.86	14.5	6.08	18.2	7.30	21.8	2.19	6.5	3.40	10.2	4.62	13.8	5.84	17.4	7.05	21.1
	0.10	39.7	2.54	6.1	3.81	9.1	5.08	12.1	6.35	15.2	7.62	18.2	2.28	5.5	3.55	8.5	4.82	11.5	6.09	14.6	7.36	17.6
1000	0.03	5.6	2.06	16.5	3.10	24.7	4.13	33.0	5.17	41.2	6.20	49.4	1.86	14.8	2.89	23.1	3.93	31.3	4.96	39.5	6.00	47.8
	0.05	13.6	2.50	12.0	3.75	17.9	5.00	23.9	6.25	29.9	7.50	35.9	2.25	10.8	3.50	16.7	4.75	22.7	6.00	28.7	7.25	34.7
	0.08	30.6	2.85	8.5	4.27	12.8	5.70	17.0	7.12	21.3	8.55	25.5	2.56	7.7	3.99	11.9	5.41	16.2	6.84	20.4	8.26	24.7
	0.10	45.1	2.99	7.2	4.49	10.7	5.98	14.3	7.48	17.9	8.98	21.5	2.69	6.4	4.19	10.0	5.68	13.6	7.18	17.2	8.68	20.7
1200	0.03	6.6	2.33	18.6	3.49	27.9	4.66	37.1	5.82	46.4	6.99	55.7	2.09	16.7	3.26	26.0	4.43	35.3	5.59	44.6	6.76	53.8
	0.05	16.0	2.89	13.8	4.33	20.7	5.78	27.6	7.23	34.5	8.67	41.5	2.60	12.4	4.04	19.3	5.49	26.3	6.94	33.2	8.38	40.1
	0.08	36.0	3.35	10.0	5.03	15.0	6.71	20.1	8.39	25.1	10.07	30.1	3.02	9.0	4.70	14.0	6.38	19.1	8.06	24.1	9.74	29.1
	0.09	44.2	3.46	9.2	5.19	13.8	6.93	18.4	8.66	23.0	10.39	27.6	3.11	8.3	4.85	12.9	6.58	17.5	8.31	22.1	10.05	26.7
1400	0.03	7.3	2.48	19.8	3.72	29.6	4.96	39.5	6.20	49.4	7.44	59.3	2.23	17.8	3.47	27.7	4.71	37.5	5.95	47.4	7.19	57.3
	0.05	17.7	3.12	14.9	4.68	22.4	6.24	29.8	7.80	37.3	9.36	44.7	2.80	13.4	4.37	20.9	5.93	28.3	7.49	35.8	9.05	43.3
	0.08	39.9	3.66	11.0	5.50	16.4	7.33	21.9	9.17	27.4	11.00	32.9	3.30	9.9	5.13	15.3	6.96	20.8	8.80	26.3	10.63	31.8
	0.09	48.9	3.79	10.1	5.69	15.1	7.58	20.1	9.48	25.2	11.38	30.2	3.41	9.1	5.31	14.1	7.20	19.1	9.10	24.2	11.00	29.2

Note:To obtain accurate air volume and cooling/heating capacities,refer to pages 54-74

Ceiling Recessed Model-High Static Model 4-Row, High Temperature Rise

SRC-2HW-HT 220V

COOLING Capacity

Unit Size	Water Flow (l/sec)	W.P.D (kPa)	Entering Air Condition DB=24.0°C WB=17.8°C (55%)									Entering Air Condition DB=26.0°C WB=19.5°C (55%)								
			Entering Water Temperature									Entering Water Temperature								
			5°C			7°C			9°C			5°C			7°C			9°C		
			SH (kW)	TH (kW)	ΔWT (°C)	SH (kW)	TH (kW)	ΔWT (°C)	SH (kW)	TH (kW)	ΔWT (°C)	SH (kW)	TH (kW)	ΔWT (°C)	SH (kW)	TH (kW)	ΔWT (°C)	SH (kW)	TH (kW)	ΔWT (°C)
300	0.05	3.3	1.52	2.00	9.6	1.38	1.76	8.5	1.25	1.52	7.3	1.63	2.28	10.9	1.49	2.04	9.8	1.35	1.80	8.6
	0.10	11.0	1.90	2.67	6.4	1.72	2.36	5.6	1.55	2.02	4.8	2.05	3.07	7.3	1.87	2.75	6.6	1.69	2.41	5.8
	0.15	22.2	2.06	3.03	4.8	1.86	2.66	4.2	1.67	2.28	3.6	2.23	3.48	5.5	2.02	3.11	5.0	1.83	2.73	4.4
	0.20	36.6	2.14	3.26	3.9	1.93	2.86	3.4	1.73	2.45	2.9	2.32	3.75	4.5	2.11	3.35	4.0	1.91	2.94	3.5
400	0.05	4.8	2.01	2.65	12.7	1.82	2.34	11.2	1.65	2.03	9.7	2.14	3.01	14.4	1.96	2.70	12.9	1.78	2.38	11.4
	0.10	15.8	2.58	3.66	8.8	2.34	3.23	7.7	2.11	2.78	6.6	2.78	4.18	10.0	2.53	3.75	9.0	2.29	3.30	7.9
	0.15	31.9	2.84	4.21	6.7	2.57	3.71	5.9	2.31	3.18	5.1	3.06	4.83	7.7	2.79	4.32	6.9	2.53	3.80	6.1
	0.20	52.4	2.98	4.57	5.5	2.70	4.02	4.8	2.42	3.44	4.1	3.23	5.25	6.3	2.94	4.70	5.6	2.66	4.13	4.9
600	0.05	5.5	2.31	3.03	14.5	2.10	2.68	12.8	1.91	2.32	11.1	2.46	3.43	16.4	2.25	3.08	14.8	2.05	2.72	13.0
	0.10	18.4	3.05	4.30	10.3	2.77	3.80	9.1	2.50	3.27	7.8	3.28	4.91	11.7	2.99	4.40	10.5	2.71	3.88	9.3
	0.15	37.0	3.41	5.02	8.0	3.09	4.42	7.1	2.78	3.80	6.1	3.68	5.75	9.2	3.35	5.15	8.2	3.03	4.53	7.2
	0.17	46.0	3.51	5.23	7.4	3.17	4.61	6.5	2.85	3.95	5.6	3.78	6.00	8.4	3.45	5.37	7.6	3.12	4.72	6.6
800	0.05	7.2	2.70	3.55	17.0	2.45	3.15	15.1	2.23	2.73	13.1	2.87	4.02	19.2	2.62	3.61	17.3	2.39	3.19	15.3
	0.10	23.8	3.68	5.20	12.4	3.33	4.59	11.0	3.01	3.96	9.5	3.94	5.92	14.1	3.60	5.31	12.7	3.27	4.68	11.2
	0.13	37.5	4.01	5.83	10.7	3.63	5.14	9.5	3.27	4.42	8.1	4.31	6.65	12.2	3.93	5.97	11.0	3.56	5.25	9.7
	0.15	48.0	4.18	6.17	9.8	3.78	5.43	8.7	3.41	4.67	7.4	4.49	7.05	11.2	4.10	6.32	10.1	3.71	5.56	8.9
1000	0.10	4.1	4.00	5.21	12.5	3.63	4.61	11.0	3.30	3.99	9.5	4.27	5.91	14.1	3.90	5.31	12.7	3.55	4.69	11.2
	0.20	13.6	5.18	7.24	8.7	4.69	6.38	7.6	4.23	5.49	6.6	5.58	8.27	9.9	5.08	7.42	8.9	4.61	6.53	7.8
	0.30	27.4	5.72	8.35	6.7	5.18	7.35	5.9	4.66	6.31	5.0	6.18	9.57	7.6	5.62	8.58	6.8	5.09	7.53	6.0
	0.40	45.1	6.03	9.08	5.4	5.45	7.99	4.8	4.89	6.84	4.1	6.52	10.43	6.2	5.93	9.34	5.6	5.36	8.20	4.9
1200	0.10	4.8	4.61	5.96	14.3	4.19	5.28	12.6	3.81	4.58	10.9	4.91	6.75	16.1	4.49	6.07	14.5	4.09	5.36	12.8
	0.20	16.0	6.13	8.50	10.2	5.55	7.51	9.0	5.02	6.47	7.7	6.57	9.69	11.6	6.00	8.70	10.4	5.44	7.66	9.2
	0.30	32.2	6.86	9.94	7.9	6.21	8.76	7.0	5.59	7.53	6.0	7.38	11.37	9.1	6.73	10.19	8.1	6.10	8.96	7.1
	0.35	42.1	7.09	10.46	7.1	6.42	9.21	6.3	5.78	7.91	5.4	7.65	11.98	8.2	6.97	10.73	7.3	6.31	9.43	6.4
1400	0.10	5.3	4.96	6.41	15.3	4.52	5.68	13.6	4.11	4.93	11.8	5.29	7.25	17.3	4.83	6.52	15.6	4.40	5.77	13.8
	0.20	17.7	6.70	9.28	11.1	6.08	8.20	9.8	5.50	7.07	8.5	7.18	10.57	12.6	6.55	9.49	11.3	5.95	8.36	10.0
	0.30	35.7	7.56	10.94	8.7	6.85	9.64	7.7	6.17	8.29	6.6	8.14	12.50	10.0	7.41	11.21	8.9	6.72	9.86	7.9
	0.35	46.6	7.84	11.54	7.9	7.10	10.17	6.9	6.39	8.73	6.0	8.45	13.21	9.0	7.70	11.84	8.1	6.98	10.41	7.1

◀41·42

HEATING Capacity

Unit Size	Water Flow (l/sec)	W.P.D (kPa)	Entering Air Condition DB=20.0°C										Entering Air Condition DB=22.0°C									
			Entering Water Temperature										Entering Water Temperature									
			40°C		50°C		60°C		70°C		80°C		40°C		50°C		60°C		70°C		80°C	
			TH (kW)	ΔWT (°C)	TH (kW)	ΔWT (°C)	TH (kW)	ΔWT (°C)	TH (kW)	ΔWT (°C)	TH (kW)	ΔWT (°C)	TH (kW)	ΔWT (°C)	TH (kW)	ΔWT (°C)	TH (kW)	ΔWT (°C)	TH (kW)	ΔWT (°C)	TH (kW)	ΔWT (°C)
300	0.05	3.3	2.10	10.1	3.16	15.1	4.21	20.2	5.27	25.2	6.32	30.2	1.89	9.1	2.95	14.1	4.00	19.1	5.06	24.2	6.11	29.2
	0.10	11.0	2.43	5.8	3.64	8.7	4.86	11.6	6.07	14.5	7.29	17.4	2.18	5.2	3.40	8.1	4.61	11.0	5.83	13.9	7.05	16.8
	0.15	22.2	2.56	4.1	3.85	6.1	5.13	8.2	6.41	10.2	7.70	12.3	2.31	3.7	3.59	5.7	4.87	7.8	6.16	9.8	7.44	11.9
	0.20	36.6	2.64	3.2	3.96	4.7	5.28	6.3	6.60	7.9	7.93	9.5	2.37	2.8	3.70	4.4	5.02	6.0	6.34	7.6	7.66	9.2
400	0.05	4.8	2.77	13.2	4.15	19.9	5.54	26.5	6.92	33.1	8.31	39.7	2.49	11.9	3.87	18.5	5.26	25.1	6.64	31.8	8.03	38.4
	0.10	15.8	3.34	8.0	5.01	12.0	6.68	16.0	8.35	20.0	10.02	23.9	3.00	7.2	4.67	11.2	6.34	15.2	8.01	19.2	9.69	23.1
	0.15	31.9	3.59	5.7	5.39	8.6	7.18	11.5	8.98	14.3	10.78	17.2	3.23	5.2	5.03	8.0	6.83	10.9	8.62	13.7	10.42	16.6
	0.20	52.4	3.74	4.5	5.61	6.7	7.48	8.9	9.35	11.2	11.22	13.4	3.36	4.0	5.23	6.3	7.10	8.5	8.97	10.7	10.84	13.0
600	0.05	5.5	3.18	15.2	4.78	22.9	6.37	30.5	7.97	38.1	9.56	45.7	2.87	13.7	4.46	21.3	6.05	28.9	7.65	36.6	9.24	44.2
	0.10	18.4	3.96	9.5	5.94	14.2	7.93	18.9	9.91	23.7	11.89	28.4	3.56	8.5	5.55	13.3	7.53	18.0	9.51	22.7	11.50	27.5
	0.15	37.0	4.32	6.9	6.48	10.3	8.64	13.8	10.81	17.2	12.97	20.7	3.89	6.2	6.05	9.6	8.21	13.1	10.37	16.5	12.54	20.0
	0.17	46.0	4.41	6.2	6.62	9.3	8.83	12.4	11.04	15.5	13.25	18.6	3.97	5.6	6.18	8.7	8.39	11.8	10.60	14.9	12.81	18.0
800	0.05	7.2	3.70	17.7	5.56	26.6	7.41	35.4	9.27	44.3	11.12	53.2	3.33	15.9	5.19	24.8	7.04	33.7	8.90	42.5	10.75	51.4
	0.10	23.8	4.79	11.4	7.18	17.2	9.58	22.9	11.98	28.6	14.37	34.3	4.31	10.3	6.70	16.0	9.10	21.8	11.50	27.5	13.89	33.2
	0.13	37.5	5.14	9.5	7.71	14.2	10.28	18.9	12.86	23.6	15.43	28.4	4.62	8.5	7.20	13.2	9.77	18.0	12.34	22.7	14.91	27.4
	0.15	48.0	5.31	8.5	7.97	12.7	10.63	16.9	13.29	21.2	15.95	25.4	4.78	7.6	7.44	11.9	10.10	16.1	12.76	20.3	15.42	24.6
1000	0.10	4.1	5.53	13.2	8.30	19.8	11.07	26.5	13.84	33.1	16.61	39.7	4.98	11.9	7.75	18.5	10.52	25.1	13.29	31.8	16.06	38.4
	0.20	13.6	6.68	8.0	10.02	12.0	13.37	16.0	16.71	20.0	20.05	24.0	6.01	7.2	9.35	11.2	12.70	15.2	16.04	19.2	19.38	23.2
	0.30	27.4	7.19	5.7	10.79	8.6	14.39	11.5	17.99	14.3	21.58	17.2	6.47	5.2	10.07	8.0	13.67	10.9	17.27	13.8	20.86	16.6
	0.40	45.1	7.49	4.5	11.23	6.7	14.98	8.9	18.72	11.2	22.47	13.4	6.74	4.0	10.48	6.3	14.23	8.5	17.97	10.7	21.72	13.0
1200	0.10	4.8	6.41	15.3	9.61	23.0	12.81	30.6	16.02	38.3	19.22	45.9	5.76	13.8	8.97	21.4	12.17	29.1	15.38	36.8	18.58	44.4
	0.20	16.0	7.98	9.5	11.98	14.3	15.97	19.1	19.96	23.9	23.96	28.6	7.18	8.6	11.18	13.4	15.17	18.1	19.17	22.9	23.16	27.7
	0.30	32.2	8.72	6.9	13.08	10.4	17.44	13.9	21.80	17.4	26.16	20.8	7.84	6.3	12.20	9.7	16.56	13.2	20.92	16.7	25.28	20.1
	0.35	42.1	8.96	6.1	13.44	9.2	17.92	12.2	22.40	15.3	26.88	18.3	8.06	5.5	12.54	8.6	17.02	11.6	21.50	14.7	25.98	17.7
1400	0.10	5.3	6.90	16.5	10.35	24.7	13.80	33.0	17.25	41.2	20.70	49.5	6.21	14.8	9.66	23.1	13.11	31.3	16.56	39.6	20.01	47.8
	0.20	17.7	8.75	10.5	13.13	15.7	17.51	20.9	21.89	26.1	26.26	31.4	7.88	9.4	12.25	14.6	16.63	19.9	21.01	25.1	25.39	30.3
	0.30	35.7	9.63	7.7	14.45	11.5	19.27	15.4	24.09	19.2	28.91	23.0	8.67	6.9	13.49	10.7	18.31	14.6	23.13	18.4	27.95	22.3
	0.35	46.6	9.93	6.8	14.89	10.2	19.86	13.6	24.82	16.9	29.79	20.3	8.93	6.1	13.90	9.5	18.86	12.9	23.83	16.3	28.79	19.7

Note:To obtain accurate air volume and cooling/heating capacities,refer to pages 54-74

Ceiling Recessed Model-Large Air Volume Model 3-Row Cooling/Heating

SRC-2SH-3R 220V

COOLING Capacity

Unit Size	Water Flow (l/sec)	W.P.D (kPa)	Entering Air Condition DB=24.0°C WB=17.8°C (55%)									Entering Air Condition DB=26.0°C WB=19.5°C (55%)								
			Entering Water Temperature									Entering Water Temperature								
			5°C			7°C			9°C			5°C			7°C			9°C		
			SH (kW)	TH (kW)	ΔWT (°C)	SH (kW)	TH (kW)	ΔWT (°C)	SH (kW)	TH (kW)	ΔWT (°C)	SH (kW)	TH (kW)	ΔWT (°C)	SH (kW)	TH (kW)	ΔWT (°C)	SH (kW)	TH (kW)	ΔWT (°C)
300	0.05	0.8	1.30	1.55	7.4	1.18	1.37	6.6	1.08	1.19	5.7	1.39	1.75	8.4	1.27	1.58	7.6	1.16	1.39	6.7
	0.10	2.8	1.75	2.22	5.3	1.59	1.95	4.7	1.43	1.69	4.0	1.88	2.53	6.1	1.72	2.27	5.4	1.56	2.00	4.8
	0.15	5.6	1.96	2.58	4.1	1.77	2.27	3.6	1.60	1.95	3.1	2.11	2.95	4.7	1.92	2.64	4.2	1.74	2.32	3.7
	0.20	9.2	2.07	2.81	3.4	1.87	2.47	3.0	1.69	2.12	2.5	2.24	3.22	3.9	2.04	2.88	3.5	1.84	2.53	3.0
400	0.10	3.9	2.64	3.31	7.9	2.40	2.93	7.0	2.18	2.53	6.1	2.83	3.77	9.0	2.58	3.38	8.1	2.35	2.98	7.1
	0.15	8.0	3.02	3.94	6.3	2.74	3.48	5.5	2.48	3.00	4.8	3.25	4.49	7.2	2.96	4.03	6.4	2.69	3.55	5.7
	0.20	13.1	3.24	4.35	5.2	2.94	3.83	4.6	2.65	3.30	3.9	3.49	4.97	5.9	3.18	4.46	5.3	2.88	3.92	4.7
	0.25	19.3	3.39	4.65	4.4	3.07	4.09	3.9	2.76	3.52	3.4	3.65	5.32	5.1	3.33	4.77	4.6	3.01	4.19	4.0
600	0.10	4.6	2.86	3.62	8.7	2.59	3.20	7.7	2.35	2.76	6.6	3.06	4.12	9.8	2.79	3.69	8.8	2.54	3.26	7.8
	0.15	9.3	3.26	4.30	6.9	2.96	3.80	6.1	2.67	3.27	5.2	3.51	4.91	7.8	3.20	4.41	7.0	2.90	3.88	6.2
	0.20	15.2	3.51	4.76	5.7	3.17	4.19	5.0	2.86	3.60	4.3	3.78	5.44	6.5	3.44	4.88	5.8	3.12	4.29	5.1
	0.30	30.7	3.77	5.34	4.3	3.41	4.70	3.7	3.06	4.03	3.2	4.07	6.12	4.9	3.71	5.48	4.4	3.36	4.81	3.8
800	0.15	12.0	4.14	5.45	8.7	3.75	4.81	7.7	3.39	4.15	6.6	4.45	6.22	9.9	4.05	5.57	8.9	3.68	4.91	7.8
	0.20	19.7	4.49	6.09	7.3	4.07	5.37	6.4	3.67	4.62	5.5	4.84	6.96	8.3	4.41	6.24	7.5	4.00	5.49	6.6
	0.25	29.0	4.73	6.56	6.3	4.28	5.78	5.5	3.85	4.96	4.7	5.10	7.51	7.2	4.65	6.73	6.4	4.21	5.92	5.7
	0.30	39.7	4.90	6.93	5.5	4.43	6.10	4.9	3.98	5.23	4.2	5.29	7.94	6.3	4.82	7.11	5.7	4.36	6.25	5.0
1000	0.20	3.4	5.13	6.36	7.6	4.66	5.63	6.7	4.23	4.87	5.8	5.49	7.24	8.7	5.01	6.50	7.8	4.55	5.73	6.8
	0.30	6.9	5.88	7.58	6.0	5.33	6.69	5.3	4.82	5.77	4.6	6.31	8.65	6.9	5.75	7.75	6.2	5.22	6.83	5.4
	0.40	11.3	6.31	8.38	5.0	5.72	7.39	4.4	5.16	6.36	3.8	6.80	9.58	5.7	6.19	8.59	5.1	5.62	7.55	4.5
	0.50	16.6	6.60	8.95	4.3	5.97	7.89	3.8	5.38	6.78	3.2	7.12	10.26	4.9	6.48	9.19	4.4	5.87	8.07	3.9
1200	0.20	4.0	5.47	6.88	8.2	4.96	6.08	7.3	4.50	5.26	6.3	5.85	7.83	9.4	5.34	7.03	8.4	4.85	6.20	7.4
	0.30	8.1	6.24	8.17	6.5	5.66	7.21	5.7	5.11	6.21	5.0	6.71	9.33	7.4	6.11	8.36	6.7	5.55	7.36	5.9
	0.40	13.2	6.69	9.02	5.4	6.06	7.95	4.8	5.46	6.84	4.1	7.21	10.32	6.2	6.57	9.25	5.5	5.95	8.13	4.9
	0.50	19.5	6.99	9.63	4.6	6.32	8.48	4.1	5.69	7.29	3.5	7.54	11.04	5.3	6.86	9.89	4.7	6.22	8.69	4.2
1400	0.20	4.4	6.45	7.99	9.5	5.86	7.07	8.4	5.32	6.12	7.3	6.89	9.07	10.8	6.29	8.14	9.7	5.72	7.19	8.6
	0.30	8.9	7.49	9.65	7.7	6.80	8.52	6.8	6.15	7.36	5.9	8.04	10.99	8.8	7.33	9.86	7.9	6.66	8.69	6.9
	0.40	14.7	8.13	10.76	6.4	7.36	9.49	5.7	6.65	8.18	4.9	8.74	12.30	7.3	7.97	11.02	6.6	7.22	9.70	5.8
	0.55	25.4	8.71	11.91	5.2	7.88	10.50	4.6	7.10	9.02	3.9	9.39	13.64	5.9	8.55	12.22	5.3	7.75	10.74	4.7

HEATING Capacity

Unit Size	Water Flow (l/sec)	W.P.D (kPa)	Entering Air Condition DB=20.0°C										Entering Air Condition DB=22.0°C									
			Entering Water Temperature										Entering Water Temperature									
			40°C		50°C		60°C		70°C		80°C		40°C		50°C		60°C		70°C		80°C	
			TH (kW)	ΔWT (°C)	TH (kW)	ΔWT (°C)	TH (kW)	ΔWT (°C)	TH (kW)	ΔWT (°C)	TH (kW)	ΔWT (°C)	TH (kW)	ΔWT (°C)	TH (kW)	ΔWT (°C)	TH (kW)	ΔWT (°C)	TH (kW)	ΔWT (°C)	TH (kW)	ΔWT (°C)
300	0.05	0.8	2.04	9.8	3.07	14.7	4.09	19.6	5.11	24.5	6.14	29.3	1.84	8.8	2.86	13.7	3.89	18.6	4.91	23.5	5.93	28.4
	0.10	2.8	2.35	5.6	3.53	8.4	4.71	11.3	5.89	14.1	7.07	16.9	2.12	5.1	3.30	7.9	4.48	10.7	5.65	13.5	6.83	16.3
	0.15	5.6	2.49	4.0	3.73	6.0	4.98	7.9	6.22	9.9	7.47	11.9	2.24	3.6	3.48	5.6	4.73	7.5	5.97	9.5	7.22	11.5
	0.20	9.2	2.56	3.1	3.85	4.6	5.13	6.1	6.41	7.7	7.70	9.2	2.31	2.8	3.59	4.3	4.87	5.8	6.16	7.4	7.44	8.9
400	0.10	3.9	3.60	8.6	5.40	12.9	7.21	17.2	9.01	21.5	10.81	25.8	3.24	7.8	5.04	12.1	6.85	16.4	8.65	20.7	10.45	25.0
	0.15	8.0	3.91	6.2	5.86	9.3	7.82	12.5	9.78	15.6	11.73	18.7	3.52	5.6	5.47	8.7	7.43	11.8	9.38	15.0	11.34	18.1
	0.20	13.1	4.09	4.9	6.13	7.3	8.18	9.8	10.23	12.2	12.27	14.7	3.68	4.4	5.73	6.8	7.77	9.3	9.82	11.7	11.86	14.2
	0.25	19.3	4.21	4.0	6.32	6.0	8.42	8.1	10.53	10.1	12.64	12.1	3.79	3.6	5.89	5.6	8.00	7.7	10.11	9.7	12.21	11.7
600	0.10	4.6	3.83	9.2	5.75	13.8	7.67	18.3	9.59	22.9	11.51	27.5	3.45	8.3	5.37	12.8	7.29	17.4	9.21	22.0	11.13	26.6
	0.15	9.3	4.18	6.7	6.27	10.0	8.36	13.3	10.45	16.7	12.54	20.0	3.76	6.0	5.85	9.3	7.94	12.7	10.03	16.0	12.12	19.3
	0.20	15.2	4.38	5.2	6.57	7.9	8.76	10.5	10.96	13.1	13.15	15.7	3.94	4.7	6.13	7.3	8.33	10.0	10.52	12.6	12.71	15.2
	0.30	30.7	4.61	3.7	6.92	5.5	9.23	7.4	11.54	9.2	13.85	11.0	4.15	3.3	6.46	5.1	8.77	7.0	11.08	8.8	13.39	10.7
800	0.15	12.0	5.29	8.4	7.93	12.6	10.58	16.9	13.22	21.1	15.87	25.3	4.76	7.6	7.40	11.8	10.05	16.0	12.69	20.2	15.34	24.4
	0.20	19.7	5.61	6.7	8.41	10.1	11.22	13.4	14.02	16.8	16.83	20.1	5.05	6.0	7.85	9.4	10.66	12.7	13.46	16.1	16.27	19.4
	0.25	29.0	5.82	5.6	8.74	8.4	11.65	11.1	14.56	13.9	17.48	16.7	5.24	5.0	8.15	7.8	11.07	10.6	13.98	13.4	16.89	16.1
	0.30	39.7	5.98	4.8	8.97	7.1	11.96	9.5	14.96	11.9	17.95	14.3	5.38	4.3	8.37	6.7	11.37	9.1	14.36	11.4	17.35	13.8
1000	0.20	3.4	7.00	8.4	10.50	12.5	14.00	16.7	17.51	20.9	21.01	25.1	6.30	7.5	9.80	11.7	13.30	15.9	16.81	20.1	20.31	24.3
	0.30	6.9	7.58	6.0	11.38	9.1	15.17	12.1	18.96	15.1	22.76	18.1	6.82	5.4	10.62	8.5	14.41	11.5	18.20	14.5	22.00	17.5
	0.40	11.3	7.93	4.7	11.89	7.1	15.86	9.5	19.82	11.8	23.79	14.2	7.13	4.3	11.10	6.6	15.06	9.0	19.03	11.4	22.99	13.7
	0.50	16.6	8.16	3.9	12.24	5.8	16.32	7.8	20.40	9.7	24.48	11.7	7.34	3.5	11.42	5.5	15.50	7.4	19.58	9.4	23.66	11.3
1200	0.20	4.0	7.36	8.8	11.05	13.2	14.73	17.6	18.41	22.0	22.10	26.4	6.63	7.9	10.31	12.3	13.99	16.7	17.68	21.1	21.36	25.5
	0.30	8.1	8.00	6.4	12.00	9.6	16.00	12.7	20.01	15.9	24.01	19.1	7.20	5.7	11.20	8.9	15.20	12.1	19.20	15.3	23.21	18.5
	0.40	13.2	8.37	5.0	12.56	7.5	16.75	10.0	20.94	12.5	25.13	15.0	7.54	4.5	11.72	7.0	15.91	9.5	20.10	12.0	24.29	14.5
	0.50	19.5	8.62	4.1	12.94	6.2	17.25	8.2	21.56	10.3	25.88	12.4	7.76	3.7	12.07	5.8	16.39	7.8	20.70	9.9	25.02	12.0
1400	0.20	4.4	8.77	10.5	13.16	15.7	17.55	21.0	21.94	26.2	26.33	31.5	7.89	9.4	12.28	14.7	16.67	19.9	21.06	25.2	25.45	30.4
	0.30	8.9	9.68	7.7	14.53	11.6	19.37	15.4	24.22	19.3	29.06	23.1	8.71	6.9	13.56	10.8	18.40	14.7	23.25	18.5	28.09	22.4
	0.40	14.7	10.23	6.1	15.35	9.2	20.47	12.2	25.58	15.3	30.70	18.3	9.21	5.5	14.32	8.6	19.44	11.6	24.56	14.7	29.68	17.7
	0.55	25.4	10.75	4.7	16.12	7.0	21.50	9.3	26.87	11.7	32.25	14.0	9.67	4.2	15.05	6.5	20.42	8.9	25.80	11.2	31.17	13.5

Note:To obtain accurate air volume and cooling/heating capacities,refer to pages 54-74

Ceiling Recessed Model-Large Air Volume Model 4-Row Cooling/Heating

SRC-2SH-4R 220V

COOLING Capacity

Unit Size	Water Flow (l/sec)	W.P.D (kPa)	Entering Air Condition DB=24.0°C WB=17.8°C (55%)									Entering Air Condition DB=26.0°C WB=19.5°C (55%)								
			Entering Water Temperature									Entering Water Temperature								
			5°C			7°C			9°C			5°C			7°C			9°C		
			SH (kW)	TH (kW)	ΔWT (°C)	SH (kW)	TH (kW)	ΔWT (°C)	SH (kW)	TH (kW)	ΔWT (°C)	SH (kW)	TH (kW)	ΔWT (°C)	SH (kW)	TH (kW)	ΔWT (°C)	SH (kW)	TH (kW)	ΔWT (°C)
300	0.05	0.5	1.30	1.59	7.6	1.18	1.41	6.7	1.08	1.22	5.9	1.40	1.81	8.7	1.27	1.62	7.8	1.16	1.43	6.9
	0.10	1.7	1.78	2.33	5.6	1.62	2.05	4.9	1.46	1.77	4.2	1.92	2.66	6.4	1.75	2.38	5.7	1.59	2.10	5.0
	0.15	3.4	2.01	2.73	4.4	1.82	2.40	3.8	1.63	2.06	3.3	2.17	3.13	5.0	1.97	2.80	4.5	1.79	2.46	3.9
	0.20	5.6	2.13	2.99	3.6	1.93	2.63	3.1	1.73	2.25	2.7	2.31	3.43	4.1	2.10	3.07	3.7	1.90	2.69	3.2
400	0.10	2.4	2.63	3.41	8.2	2.39	3.01	7.2	2.16	2.60	6.2	2.82	3.88	9.3	2.57	3.48	8.3	2.34	3.07	7.3
	0.15	4.8	3.02	4.08	6.5	2.74	3.60	5.7	2.47	3.10	4.9	3.25	4.66	7.4	2.96	4.18	6.7	2.69	3.68	5.9
	0.20	8.0	3.25	4.52	5.4	2.94	3.98	4.8	2.65	3.42	4.1	3.50	5.18	6.2	3.19	4.64	5.5	2.89	4.08	4.9
	0.25	11.7	3.40	4.84	4.6	3.07	4.26	4.1	2.77	3.66	3.5	3.67	5.55	5.3	3.34	4.97	4.8	3.02	4.37	4.2
600	0.10	2.8	2.88	3.76	9.0	2.61	3.32	7.9	2.36	2.87	6.9	3.08	4.28	10.2	2.81	3.84	9.2	2.55	3.39	8.1
	0.15	5.6	3.31	4.50	7.2	3.00	3.97	6.3	2.70	3.42	5.5	3.56	5.15	8.2	3.24	4.62	7.4	2.94	4.06	6.5
	0.20	9.3	3.56	5.00	6.0	3.22	4.40	5.3	2.90	3.78	4.5	3.84	5.73	6.8	3.50	5.13	6.1	3.17	4.51	5.4
	0.30	18.7	3.85	5.64	4.5	3.47	4.96	4.0	3.12	4.25	3.4	4.16	6.48	5.2	3.78	5.80	4.6	3.42	5.09	4.1
800	0.15	7.3	4.31	5.84	9.3	3.91	5.15	8.2	3.53	4.44	7.1	4.64	6.66	10.6	4.23	5.97	9.5	3.84	5.26	8.4
	0.20	12.0	4.71	6.57	7.9	4.27	5.79	6.9	3.85	4.98	6.0	5.08	7.51	9.0	4.63	6.73	8.1	4.19	5.92	7.1
	0.25	17.6	4.98	7.11	6.8	4.51	6.26	6.0	4.06	5.38	5.1	5.38	8.15	7.8	4.90	7.30	7.0	4.44	6.42	6.1
	0.30	24.1	5.18	7.54	6.0	4.68	6.63	5.3	4.21	5.69	4.5	5.60	8.65	6.9	5.09	7.74	6.2	4.61	6.80	5.4
1000	0.20	2.1	5.11	6.56	7.8	4.63	5.79	6.9	4.20	5.00	6.0	5.48	7.47	8.9	5.00	6.70	8.0	4.54	5.90	7.1
	0.30	4.2	5.88	7.86	6.3	5.33	6.93	5.5	4.81	5.97	4.8	6.33	8.99	7.2	5.77	8.06	6.4	5.23	7.09	5.6
	0.40	6.9	6.34	8.73	5.2	5.74	7.69	4.6	5.17	6.60	3.9	6.84	10.00	6.0	6.23	8.96	5.4	5.64	7.87	4.7
	0.50	10.1	6.64	9.35	4.5	6.00	8.23	3.9	5.40	7.06	3.4	7.17	10.73	5.1	6.53	9.61	4.6	5.91	8.44	4.0
1200	0.20	2.4	5.67	7.32	8.7	5.14	6.47	7.7	4.66	5.59	6.7	6.07	8.33	10.0	5.54	7.48	8.9	5.03	6.59	7.9
	0.30	4.9	6.54	8.79	7.0	5.92	7.76	6.2	5.35	6.68	5.3	7.03	10.04	8.0	6.40	9.00	7.2	5.81	7.92	6.3
	0.40	8.1	7.05	9.77	5.8	6.39	8.61	5.1	5.76	7.41	4.4	7.60	11.19	6.7	6.92	10.02	6.0	6.27	8.81	5.3
	0.50	11.8	7.39	10.49	5.0	6.68	9.23	4.4	6.02	7.93	3.8	7.97	12.02	5.7	7.26	10.77	5.1	6.57	9.46	4.5
1400	0.20	2.7	6.49	8.29	9.9	5.89	7.33	8.8	5.34	6.34	7.6	6.94	9.43	11.3	6.34	8.46	10.1	5.76	7.47	8.9
	0.30	5.4	7.60	10.11	8.1	6.89	8.92	7.1	6.23	7.69	6.1	8.16	11.53	9.2	7.44	10.34	8.2	6.75	9.11	7.3
	0.40	8.9	8.28	11.34	6.8	7.50	10.00	6.0	6.76	8.60	5.1	8.91	12.97	7.7	8.12	11.63	6.9	7.36	10.23	6.1
	0.55	15.5	8.91	12.62	5.5	8.06	11.11	4.8	7.25	9.54	4.1	9.61	14.46	6.3	8.75	12.96	5.6	7.93	11.38	4.9

◀43·44

HEATING Capacity

Unit Size	Water Flow (l/sec)	W.P.D (kPa)	Entering Air Condition DB=20.0°C										Entering Air Condition DB=22.0°C									
			Entering Water Temperature										Entering Water Temperature									
			40°C		50°C		60°C		70°C		80°C		40°C		50°C		60°C		70°C		80°C	
			TH (kW)	ΔWT (°C)	TH (kW)	ΔWT (°C)	TH (kW)	ΔWT (°C)	TH (kW)	ΔWT (°C)	TH (kW)	ΔWT (°C)	TH (kW)	ΔWT (°C)	TH (kW)	ΔWT (°C)	TH (kW)	ΔWT (°C)	TH (kW)	ΔWT (°C)	TH (kW)	ΔWT (°C)
300	0.05	0.5	2.14	10.3	3.22	15.4	4.29	20.5	5.37	25.7	6.44	30.8	1.93	9.2	3.00	14.4	4.08	19.5	5.15	24.6	6.23	29.8
	0.10	1.7	2.48	5.9	3.72	8.9	4.96	11.9	6.21	14.8	7.45	17.8	2.23	5.3	3.47	8.3	4.72	11.3	5.96	14.2	7.20	17.2
	0.15	3.4	2.62	4.2	3.94	6.3	5.25	8.4	6.56	10.5	7.88	12.6	2.36	3.8	3.67	5.9	4.99	7.9	6.30	10.0	7.61	12.1
	0.20	5.6	2.70	3.2	4.06	4.9	5.41	6.5	6.76	8.1	8.12	9.7	2.43	2.9	3.78	4.5	5.14	6.1	6.49	7.8	7.84	9.4
400	0.10	2.4	3.70	8.9	5.56	13.3	7.41	17.7	9.26	22.1	11.12	26.6	3.33	8.0	5.19	12.4	7.04	16.8	8.89	21.3	10.75	25.7
	0.15	4.8	4.02	6.4	6.03	9.6	8.04	12.8	10.05	16.0	12.06	19.2	3.61	5.8	5.63	9.0	7.64	12.2	9.65	15.4	11.66	18.6
	0.20	8.0	4.20	5.0	6.30	7.5	8.41	10.0	10.51	12.6	12.61	15.1	3.78	4.5	5.88	7.0	7.99	9.5	10.09	12.1	12.19	14.6
	0.25	11.7	4.32	4.1	6.48	6.2	8.65	8.3	10.81	10.3	12.97	12.4	3.89	3.7	6.05	5.8	8.21	7.9	10.38	9.9	12.54	12.0
600	0.10	2.8	3.99	9.5	5.98	14.3	7.98	19.1	9.97	23.8	11.97	28.6	3.59	8.6	5.58	13.3	7.58	18.1	9.57	22.9	11.57	27.7
	0.15	5.6	4.35	6.9	6.53	10.4	8.70	13.9	10.88	17.3	13.06	20.8	3.91	6.2	6.09	9.7	8.27	13.2	10.45	16.6	12.62	20.1
	0.20	9.3	4.56	5.5	6.85	8.2	9.13	10.9	11.41	13.6	13.70	16.4	4.11	4.9	6.39	7.6	8.67	10.4	10.96	13.1	13.24	15.8
	0.30	18.7	4.80	3.8	7.21	5.7	9.61	7.7	12.01	9.6	14.42	11.5	4.32	3.4	6.73	5.4	9.13	7.3	11.53	9.2	13.94	11.1
800	0.15	7.3	5.68	9.1	8.53	13.6	11.37	18.1	14.21	22.6	17.06	27.2	5.11	8.2	7.96	12.7	10.80	17.2	13.64	21.7	16.49	26.3
	0.20	12.0	6.04	7.2	9.07	10.8	12.09	14.4	15.12	18.1	18.14	21.7	5.44	6.5	8.46	10.1	11.49	13.7	14.51	17.3	17.54	21.0
	0.25	17.6	6.29	6.0	9.43	9.0	12.58	12.0	15.72	15.0	18.87	18.0	5.66	5.4	8.80	8.4	11.95	11.4	15.10	14.4	18.24	17.4
	0.30	24.1	6.46	5.2	9.70	7.7	12.93	10.3	16.17	12.9	19.40	15.5	5.82	4.6	9.05	7.2	12.28	9.8	15.52	12.4	18.75	14.9
1000	0.20	2.1	7.20	8.6	10.80	12.9	14.41	17.2	18.01	21.5	21.61	25.8	6.48	7.7	10.08	12.1	13.69	16.4	17.29	20.7	20.89	25.0
	0.30	4.2	7.80	6.2	11.70	9.3	15.60	12.4	19.50	15.5	23.41	18.6	7.02	5.6	10.92	8.7	14.82	11.8	18.72	14.9	22.63	18.0
	0.40	6.9	8.15	4.9	12.22	7.3	16.30	9.7	20.37	12.2	24.45	14.6	7.33	4.4	11.41	6.8	15.48	9.2	19.56	11.7	23.63	14.1
	0.50	10.1	8.38	4.0	12.57	6.0	16.76	8.0	20.95	10.0	25.14	12.0	7.54	3.6	11.73	5.6	15.92	7.6	20.11	9.6	24.30	11.6
1200	0.20	2.4	7.95	9.5	11.93	14.3	15.91	19.0	19.89	23.8	23.87	28.5	7.16	8.6	11.14	13.3	15.12	18.1	19.10	22.8	23.08	27.6
	0.30	4.9	8.68	6.9	13.02	10.4	17.37	13.8	21.71	17.3	26.05	20.7	7.81	6.2	12.15	9.7	16.50	13.1	20.84	16.6	25.18	20.1
	0.40	8.1	9.11	5.4	13.66	8.2	18.22	10.9	22.77	13.6	27.33	16.3	8.19	4.9	12.75	7.6	17.31	10.3	21.86	13.1	26.42	15.8
	0.50	11.8	9.39	4.5	14.08	6.7	18.78	9.0	23.48	11.2	28.17	13.5	8.45	4.0	13.15	6.3	17.84	8.5	22.54	10.8	27.24	13.0
1400	0.20	2.7	9.15	10.9	13.73	16.4	18.30	21.9	22.88	27.3	27.46	32.8	8.23	9.8	12.81	15.3	17.39	20.8	21.97	26.2	26.54	31.7
	0.30	5.4	10.12	8.1	15.18	12.1	20.24	16.1	25.30	20.2	30.37	24.2	9.11	7.3	14.17	11.3	19.23	15.3	24.29	19.3	29.35	23.4
	0.40	8.9	10.70	6.4	16.05	9.6	21.40	12.8	26.75	16.0	32.10	19.2	9.63	5.8	14.98	8.9	20.33	12.1	25.68	15.3	31.03	18.5
	0.55	15.5	11.24	4.9	16.86	7.3	22.48	9.8	28.10	12.2	33.72	14.6	10.11	4.4	15.73	6.8	21.36	9.3	26.98	11.7	32.60	14.2

Note:To obtain accurate air volume and cooling/heating capacities,refer to pages 54-74

Ceiling Recessed Model-Large Air Volume Model 2-Row Cooling, 1-Row Heating

SRC-2SH-DC1 220V

COOLING Capacity

Unit Size	Water Flow (l/sec)	W.P.D (kPa)	Entering Air Condition DB=24.0°C WB=17.8°C (55%)									Entering Air Condition DB=26.0°C WB=19.5°C (55%)								
			Entering Water Temperature									Entering Water Temperature								
			5°C			7°C			9°C			5°C			7°C			9°C		
			SH (kW)	TH (kW)	ΔWT (°C)	SH (kW)	TH (kW)	ΔWT (°C)	SH (kW)	TH (kW)	ΔWT (°C)	SH (kW)	TH (kW)	ΔWT (°C)	SH (kW)	TH (kW)	ΔWT (°C)	SH (kW)	TH (kW)	ΔWT (°C)
300	0.03	0.8	0.97	1.08	7.9	0.89	0.96	7.0	0.81	0.84	6.1	1.03	1.22	8.9	0.94	1.10	8.0	0.86	0.97	7.1
	0.07	2.8	1.36	1.61	5.8	1.23	1.42	5.1	1.12	1.23	4.4	1.45	1.83	6.5	1.33	1.64	5.9	1.21	1.45	5.2
	0.10	5.6	1.54	1.89	4.5	1.40	1.67	4.0	1.27	1.44	3.5	1.66	2.16	5.2	1.51	1.94	4.6	1.37	1.70	4.1
	0.15	11.2	1.69	2.15	3.4	1.53	1.90	3.0	1.38	1.63	2.6	1.82	2.46	3.9	1.66	2.21	3.5	1.50	1.94	3.1
400	0.07	4.0	2.03	2.38	8.5	1.85	2.11	7.5	1.69	1.84	6.6	2.17	2.70	9.6	1.98	2.42	8.7	1.80	2.14	7.7
	0.10	8.0	2.36	2.87	6.9	2.14	2.54	6.1	1.95	2.20	5.3	2.53	3.26	7.8	2.30	2.93	7.0	2.10	2.58	6.2
	0.15	16.1	2.63	3.32	5.3	2.39	2.93	4.7	2.16	2.53	4.0	2.83	3.79	6.0	2.58	3.40	5.4	2.34	2.99	4.8
	0.20	26.4	2.79	3.62	4.3	2.53	3.19	3.8	2.28	2.75	3.3	3.00	4.14	4.9	2.74	3.71	4.4	2.48	3.26	3.9
600	0.07	4.6	2.20	2.61	9.3	2.00	2.31	8.3	1.82	2.01	7.2	2.35	2.96	10.6	2.14	2.66	9.5	1.95	2.35	8.4
	0.10	9.3	2.56	3.14	7.5	2.32	2.78	6.6	2.10	2.40	5.8	2.74	3.57	8.5	2.50	3.21	7.7	2.27	2.83	6.8
	0.15	18.7	2.86	3.65	5.8	2.59	3.22	5.1	2.34	2.77	4.4	3.07	4.16	6.6	2.80	3.73	6.0	2.54	3.28	5.2
	0.20	30.7	3.03	3.97	4.7	2.74	3.50	4.2	2.47	3.01	3.6	3.26	4.55	5.4	2.97	4.07	4.9	2.69	3.58	4.3
800	0.07	6.0	2.72	3.23	11.5	2.48	2.86	10.2	2.26	2.49	8.9	2.90	3.65	13.0	2.65	3.28	11.7	2.41	2.90	10.4
	0.10	12.0	3.21	3.94	9.4	2.92	3.49	8.3	2.65	3.02	7.2	3.44	4.48	10.7	3.14	4.02	9.6	2.85	3.55	8.5
	0.15	24.1	3.64	4.65	7.4	3.30	4.10	6.5	2.99	3.54	5.6	3.91	5.30	8.4	3.57	4.75	7.6	3.24	4.19	6.7
	0.20	39.7	3.90	5.11	6.1	3.53	4.51	5.4	3.18	3.88	4.6	4.20	5.84	7.0	3.82	5.24	6.3	3.46	4.61	5.5
1000	0.10	2.1	3.42	3.87	9.3	3.12	3.44	8.2	2.85	3.00	7.2	3.63	4.37	10.5	3.32	3.93	9.4	3.03	3.48	8.3
	0.20	6.9	4.56	5.49	6.6	4.14	4.86	5.8	3.76	4.21	5.0	4.88	6.25	7.5	4.46	5.61	6.7	4.05	4.95	5.9
	0.30	13.8	5.10	6.37	5.1	4.62	5.63	4.5	4.18	4.86	3.9	5.48	7.27	5.8	4.99	6.52	5.2	4.53	5.74	4.6
	0.40	22.8	5.40	6.93	4.1	4.89	6.12	3.7	4.41	5.27	3.2	5.81	7.93	4.7	5.30	7.11	4.2	4.80	6.25	3.7
1200	0.10	2.4	3.67	4.22	10.1	3.35	3.74	9.0	3.06	3.26	7.8	3.91	4.77	11.4	3.57	4.29	10.2	3.26	3.79	9.1
	0.20	8.1	4.88	5.96	7.1	4.43	5.27	6.3	4.02	4.57	5.5	5.23	6.78	8.1	4.77	6.09	7.3	4.34	5.37	6.4
	0.30	16.2	5.45	6.91	5.5	4.94	6.10	4.9	4.46	5.26	4.2	5.86	7.89	6.3	5.34	7.07	5.6	4.84	6.23	5.0
	0.45	32.8	5.88	7.75	4.1	5.32	6.83	3.6	4.79	5.88	3.1	6.34	8.88	4.7	5.77	7.95	4.2	5.23	6.99	3.7
1400	0.10	2.7	4.23	4.79	11.5	3.86	4.25	10.2	3.53	3.72	8.9	4.49	5.39	12.9	4.10	4.85	11.6	3.75	4.30	10.3
	0.20	8.9	5.78	6.95	8.3	5.26	6.15	7.4	4.78	5.34	6.4	6.18	7.89	9.4	5.64	7.09	8.5	5.13	6.26	7.5
	0.30	18.0	6.55	8.17	6.5	5.94	7.22	5.8	5.38	6.24	5.0	7.03	9.31	7.4	6.41	8.35	6.7	5.82	7.36	5.9
	0.45	36.2	7.15	9.27	4.9	6.47	8.18	4.3	5.85	7.05	3.7	7.70	10.60	5.6	7.01	9.50	5.0	6.36	8.36	4.4

HEATING Capacity

Unit Size	Water Flow (l/sec)	W.P.D (kPa)	Entering Air Condition DB=20.0°C										Entering Air Condition DB=22.0°C									
			Entering Water Temperature										Entering Water Temperature									
			40°C		50°C		60°C		70°C		80°C		40°C		50°C		60°C		70°C		80°C	
			TH (kW)	ΔWT (°C)	TH (kW)	ΔWT (°C)	TH (kW)	ΔWT (°C)	TH (kW)	ΔWT (°C)	TH (kW)	ΔWT (°C)	TH (kW)	ΔWT (°C)	TH (kW)	ΔWT (°C)	TH (kW)	ΔWT (°C)	TH (kW)	ΔWT (°C)	TH (kW)	ΔWT (°C)
300	0.03	2.3	1.03	8.2	1.55	12.3	2.06	16.5	2.58	20.6	3.10	24.7	0.93	7.4	1.44	11.5	1.96	15.6	2.48	19.8	2.99	23.9
	0.05	5.6	1.14	5.5	1.71	8.2	2.28	10.9	2.85	13.6	3.42	16.4	1.02	4.9	1.59	7.6	2.16	10.4	2.73	13.1	3.30	15.8
	0.08	12.6	1.21	3.6	1.82	5.5	2.43	7.3	3.04	9.1	3.65	10.9	1.09	3.3	1.70	5.1	2.31	6.9	2.92	8.7	3.53	10.6
	0.10	18.5	1.24	3.0	1.87	4.5	2.49	6.0	3.12	7.5	3.74	9.0	1.12	2.7	1.74	4.2	2.37	5.7	2.99	7.2	3.62	8.7
400	0.03	3.3	1.50	11.9	2.25	17.9	3.00	23.9	3.75	29.9	4.50	35.8	1.35	10.8	2.10	16.7	2.85	22.7	3.60	28.7	4.35	34.7
	0.05	8.0	1.72	8.2	2.59	12.4	3.45	16.5	4.31	20.6	5.17	24.7	1.55	7.4	2.41	11.5	3.28	15.7	4.14	19.8	5.00	23.9
	0.08	18.0	1.89	5.7	2.84	8.5	3.79	11.3	4.74	14.2	5.69	17.0	1.70	5.1	2.65	7.9	3.60	10.8	4.55	13.6	5.50	16.4
	0.10	26.4	1.96	4.7	2.94	7.0	3.93	9.4	4.91	11.7	5.89	14.1	1.76	4.2	2.75	6.6	3.73	8.9	4.71	11.3	5.70	13.6
600	0.03	3.8	1.60	12.8	2.41	19.2	3.21	25.6	4.02	32.0	4.82	38.4	1.44	11.5	2.25	17.9	3.05	24.3	3.86	30.7	4.66	37.2
	0.05	9.3	1.86	8.9	2.80	13.4	3.73	17.8	4.66	22.3	5.60	26.8	1.68	8.0	2.61	12.5	3.54	17.0	4.48	21.4	5.41	25.9
	0.08	20.9	2.06	6.2	3.09	9.2	4.12	12.3	5.15	15.4	6.18	18.5	1.85	5.5	2.88	8.6	3.91	11.7	4.95	14.8	5.98	17.9
	0.10	30.7	2.14	5.1	3.21	7.7	4.28	10.2	5.35	12.8	6.42	15.4	1.92	4.6	2.99	7.2	4.06	9.7	5.14	12.3	6.21	14.8
800	0.03	4.9	1.94	15.5	2.91	23.2	3.88	30.9	4.85	38.6	5.82	46.4	1.74	13.9	2.71	21.6	3.68	29.4	4.65	37.1	5.62	44.8
	0.05	12.0	2.32	11.1	3.48	16.6	4.64	22.2	5.80	27.7	6.96	33.3	2.08	10.0	3.24	15.5	4.40	21.1	5.57	26.6	6.73	32.2
	0.08	27.0	2.62	7.8	3.93	11.7	5.24	15.7	6.55	19.6	7.86	23.5	2.35	7.0	3.66	11.0	4.97	14.9	6.29	18.8	7.60	22.7
	0.10	39.7	2.74	6.6	4.11	9.8	5.48	13.1	6.86	16.4	8.23	19.7	2.46	5.9	3.84	9.2	5.21	12.5	6.58	15.7	7.95	19.0
1000	0.03	5.6	2.25	17.9	3.37	26.9	4.50	35.9	5.62	44.8	6.75	53.8	2.02	16.1	3.15	25.1	4.27	34.1	5.40	43.0	6.52	52.0
	0.05	13.6	2.77	13.3	4.16	19.9	5.54	26.5	6.93	33.1	8.32	39.8	2.49	11.9	3.88	18.6	5.27	25.2	6.65	31.8	8.04	38.4
	0.08	30.6	3.20	9.6	4.81	14.4	6.41	19.2	8.02	24.0	9.62	28.7	2.88	8.6	4.49	13.4	6.09	18.2	7.70	23.0	9.30	27.8
	0.10	45.1	3.39	8.1	5.08	12.2	6.78	16.2	8.48	20.3	10.17	24.3	3.05	7.3	4.74	11.3	6.44	15.4	8.14	19.4	9.83	23.5
1200	0.03	6.6	2.36	18.8	3.54	28.2	4.72	37.6	5.90	47.0	7.08	56.4	2.12	16.9	3.30	26.3	4.48	35.7	5.66	45.1	6.84	54.5
	0.05	16.0	2.93	14.0	4.40	21.1	5.87	28.1	7.34	35.1	8.81	42.1	2.64	12.6	4.11	19.7	5.58	26.7	7.05	33.7	8.51	40.7
	0.08	36.0	3.42	10.2	5.13	15.3	6.84	20.4	8.55	25.5	10.26	30.6	3.07	9.2	4.78	14.3	6.50	19.4	8.21	24.5	9.92	29.6
	0.09	44.2	3.53	9.4	5.29	14.1	7.06	18.7	8.82	23.4	10.59	28.1	3.17	8.4	4.94	13.1	6.71	17.8	8.47	22.5	10.24	27.2
1400	0.03	7.3	2.61	20.8	3.92	31.3	5.23	41.7	6.54	52.1	7.85	62.5	2.35	18.8	3.66	29.2	4.97	39.6	6.28	50.0	7.59	60.5
	0.05	17.7	3.34	16.0	5.01	24.0	6.68	31.9	8.35	39.9	10.02	47.9	3.00	14.4	4.67	22.4	6.35	30.3	8.02	38.3	9.69	46.3
	0.08	39.9	3.97	11.9	5.96	17.8	7.95	23.8	9.94	29.7	11.93	35.6	3.57	10.7	5.56	16.6	7.55	22.6	9.54	28.5	11.53	34.4
	0.09	48.9	4.12	11.0	6.18	16.4	8.25	21.9	10.31	27.4	12.37	32.9	3.71	9.9	5.77	15.3	7.83	20.8	9.90	26.3	11.96	31.8

Note:To obtain accurate air volume and cooling/heating capacities,refer to pages 54-74

Ceiling Recessed Model-Large Air Volume Model 3-Row Cooling, 1-Row Heating

SRC-2SH-DC2 220V

COOLING Capacity

Unit Size	Water Flow (l/sec)	W.P.D (kPa)	Entering Air Condition DB=24.0°C WB=17.8°C (55%)									Entering Air Condition DB=26.0°C WB=19.5°C (55%)								
			Entering Water Temperature									Entering Water Temperature								
			5°C			7°C			9°C			5°C			7°C			9°C		
			SH (kW)	TH (kW)	ΔWT (°C)	SH (kW)	TH (kW)	ΔWT (°C)	SH (kW)	TH (kW)	ΔWT (°C)	SH (kW)	TH (kW)	ΔWT (°C)	SH (kW)	TH (kW)	ΔWT (°C)	SH (kW)	TH (kW)	ΔWT (°C)
300	0.05	0.8	1.26	1.51	7.2	1.15	1.33	6.4	1.04	1.16	5.6	1.35	1.71	8.2	1.23	1.54	7.4	1.12	1.36	6.5
	0.10	2.8	1.68	2.14	5.1	1.52	1.89	4.5	1.37	1.63	3.9	1.81	2.45	5.9	1.65	2.20	5.3	1.49	1.93	4.6
	0.15	5.6	1.87	2.48	4.0	1.69	2.18	3.5	1.52	1.88	3.0	2.02	2.85	4.5	1.84	2.55	4.1	1.66	2.24	3.6
	0.20	9.2	1.98	2.70	3.2	1.78	2.37	2.8	1.60	2.03	2.4	2.14	3.10	3.7	1.95	2.77	3.3	1.76	2.43	2.9
400	0.10	3.9	2.50	3.16	7.6	2.27	2.79	6.7	2.05	2.41	5.8	2.68	3.60	8.6	2.44	3.23	7.7	2.22	2.85	6.8
	0.15	8.0	2.84	3.74	6.0	2.57	3.29	5.3	2.32	2.84	4.5	3.05	4.27	6.8	2.78	3.83	6.1	2.52	3.37	5.4
	0.20	13.1	3.03	4.11	4.9	2.74	3.62	4.3	2.47	3.11	3.7	3.27	4.71	5.6	2.98	4.22	5.0	2.70	3.71	4.4
	0.25	19.3	3.16	4.38	4.2	2.85	3.85	3.7	2.57	3.31	3.2	3.41	5.02	4.8	3.10	4.50	4.3	2.81	3.95	3.8
600	0.10	4.6	2.74	3.49	8.4	2.48	3.09	7.4	2.24	2.66	6.4	2.94	3.98	9.5	2.68	3.57	8.5	2.43	3.15	7.5
	0.15	9.3	3.11	4.13	6.6	2.82	3.64	5.8	2.54	3.14	5.0	3.35	4.73	7.5	3.05	4.24	6.8	2.76	3.73	5.9
	0.20	15.2	3.33	4.56	5.4	3.01	4.01	4.8	2.71	3.44	4.1	3.59	5.22	6.2	3.27	4.68	5.6	2.96	4.11	4.9
	0.30	30.7	3.57	5.10	4.1	3.22	4.48	3.6	2.89	3.84	3.1	3.86	5.86	4.7	3.51	5.24	4.2	3.18	4.60	3.7
800	0.15	12.0	4.06	5.37	8.6	3.68	4.74	7.6	3.33	4.08	6.5	4.37	6.13	9.8	3.98	5.50	8.8	3.61	4.84	7.7
	0.20	19.7	4.41	5.99	7.2	3.99	5.28	6.3	3.59	4.54	5.4	4.75	6.86	8.2	4.33	6.14	7.3	3.92	5.40	6.5
	0.25	29.0	4.63	6.45	6.2	4.19	5.68	5.4	3.77	4.87	4.7	5.00	7.39	7.1	4.56	6.62	6.3	4.12	5.82	5.6
	0.30	39.7	4.80	6.80	5.4	4.34	5.99	4.8	3.90	5.13	4.1	5.19	7.81	6.2	4.72	6.99	5.6	4.27	6.14	4.9
1000	0.20	3.4	4.83	6.07	7.3	4.39	5.36	6.4	3.97	4.63	5.5	5.19	6.91	8.3	4.73	6.20	7.4	4.30	5.46	6.5
	0.30	6.9	5.50	7.17	5.7	4.98	6.32	5.0	4.49	5.44	4.3	5.92	8.20	6.5	5.39	7.35	5.9	4.89	6.46	5.2
	0.40	11.3	5.88	7.89	4.7	5.32	6.95	4.2	4.79	5.97	3.6	6.35	9.05	5.4	5.78	8.10	4.8	5.23	7.12	4.3
	0.50	16.6	6.13	8.41	4.0	5.54	7.41	3.5	4.98	6.35	3.0	6.62	9.66	4.6	6.03	8.65	4.1	5.45	7.59	3.6
1200	0.20	4.0	5.39	6.80	8.1	4.89	6.01	7.2	4.43	5.19	6.2	5.77	7.74	9.3	5.27	6.95	8.3	4.78	6.12	7.3
	0.30	8.1	6.14	8.06	6.4	5.56	7.11	5.7	5.02	6.12	4.9	6.60	9.21	7.3	6.02	8.26	6.6	5.46	7.26	5.8
	0.40	13.2	6.58	8.89	5.3	5.95	7.83	4.7	5.36	6.73	4.0	7.09	10.18	6.1	6.46	9.12	5.5	5.85	8.02	4.8
	0.50	19.5	6.86	9.49	4.5	6.21	8.36	4.0	5.58	7.17	3.4	7.41	10.89	5.2	6.75	9.75	4.7	6.11	8.56	4.1
1400	0.20	4.4	6.17	7.71	9.2	5.60	6.82	8.2	5.08	5.90	7.1	6.61	8.77	10.5	6.03	7.87	9.4	5.48	6.94	8.3
	0.30	8.9	7.12	9.26	7.4	6.46	8.17	6.5	5.84	7.04	5.6	7.66	10.57	8.4	6.98	9.48	7.5	5.82	7.36	5.9
	0.40	14.7	7.70	10.29	6.2	6.97	9.07	5.4	6.29	7.81	4.7	8.30	11.78	7.0	7.56	10.55	6.3	6.22	8.08	4.8
	0.55	25.4	8.22	11.36	4.9	7.44	10.00	4.3	6.69	8.59	3.7	8.88	13.03	5.7	8.09	11.67	5.1	6.57	8.81	3.8

◀45·46

HEATING Capacity

Unit Size	Water Flow (l/sec)	W.P.D (kPa)	Entering Air Condition DB=20.0°C										Entering Air Condition DB=22.0°C									
			Entering Water Temperature										Entering Water Temperature									
			40°C		50°C		60°C		70°C		80°C		40°C		50°C		60°C		70°C		80°C	
			TH (kW)	ΔWT (°C)	TH (kW)	ΔWT (°C)	TH (kW)	ΔWT (°C)	TH (kW)	ΔWT (°C)	TH (kW)	ΔWT (°C)	TH (kW)	ΔWT (°C)	TH (kW)	ΔWT (°C)	TH (kW)	ΔWT (°C)	TH (kW)	ΔWT (°C)	TH (kW)	ΔWT (°C)
300	0.03	2.3	0.99	7.9	1.49	11.9	1.99	15.9	2.49	19.8	2.98	23.8	0.89	7.1	1.39	11.1	1.89	15.1	2.39	19.0	2.88	23.0
	0.05	5.6	1.09	5.2	1.64	7.9	2.19	10.5	2.73	13.1	3.28	15.7	0.98	4.7	1.53	7.3	2.08	9.9	2.62	12.6	3.17	15.2
	0.08	12.6	1.16	3.5	1.75	5.2	2.33	7.0	2.91	8.7	3.50	10.5	1.05	3.1	1.63	4.9	2.21	6.6	2.80	8.4	3.38	10.1
	0.10	18.5	1.19	2.9	1.79	4.3	2.39	5.7	2.98	7.1	3.58	8.6	1.07	2.6	1.67	4.0	2.27	5.4	2.86	6.9	3.46	8.3
400	0.03	3.3	1.42	11.4	2.14	17.1	2.85	22.7	3.56	28.4	4.28	34.1	1.28	10.2	1.99	15.9	2.71	21.6	3.42	27.3	4.14	33.0
	0.05	8.0	1.63	7.8	2.44	11.7	3.26	15.6	4.07	19.5	4.89	23.4	1.46	7.0	2.28	10.9	3.09	14.8	3.91	18.7	4.73	22.6
	0.08	18.0	1.78	5.3	2.67	8.0	3.56	10.6	4.45	13.3	5.34	16.0	1.60	4.8	2.49	7.5	3.38	10.1	4.27	12.8	5.16	15.4
	0.10	26.4	1.84	4.4	2.76	6.6	3.68	8.8	4.60	11.0	5.52	13.2	1.65	4.0	2.57	6.2	3.50	8.4	4.42	10.6	5.34	12.8
600	0.03	3.8	1.55	12.4	2.32	18.5	3.10	24.7	3.87	30.9	4.65	37.1	1.39	11.1	2.17	17.3	2.94	23.5	3.72	29.7	4.49	35.8
	0.05	9.3	1.79	8.6	2.68	12.8	3.58	17.1	4.47	21.4	5.37	25.7	1.61	7.7	2.50	12.0	3.40	16.3	4.29	20.5	5.19	24.8
	0.08	20.9	1.96	5.9	2.95	8.8	3.93	11.8	4.92	14.7	5.90	17.6	1.77	5.3	2.75	8.2	3.74	11.2	4.72	14.1	5.71	17.1
	0.10	30.7	2.04	4.9	3.06	7.3	4.08	9.8	5.10	12.2	6.12	14.6	1.83	4.4	2.85	6.8	3.87	9.3	4.90	11.7	5.92	14.1
800	0.03	4.9	1.91	15.2	2.87	22.9	3.82	30.5	4.78	38.1	5.74	45.7	1.72	13.7	2.68	21.3	3.63	29.0	4.59	36.6	5.55	44.2
	0.05	12.0	2.28	10.9	3.42	16.4	4.56	21.8	5.70	27.3	6.85	32.7	2.05	9.8	3.19	15.3	4.33	20.7	5.48	26.2	6.62	31.6
	0.08	27.0	2.57	7.7	3.86	11.5	5.14	15.4	6.43	19.2	7.72	23.1	2.31	6.9	3.60	10.8	4.89	14.6	6.17	18.4	7.46	22.3
	0.10	39.7	2.69	6.4	4.03	9.6	5.38	12.9	6.73	16.1	8.07	19.3	2.42	5.8	3.76	9.0	5.11	12.2	6.46	15.4	7.80	18.7
1000	0.03	5.6	2.16	17.2	3.24	25.8	4.32	34.4	5.40	43.0	6.48	51.6	1.94	15.5	3.02	24.1	4.10	32.7	5.18	41.3	6.26	49.9
	0.05	13.6	2.63	12.6	3.95	18.9	5.27	25.2	6.59	31.5	7.91	37.8	2.37	11.3	3.69	17.6	5.01	24.0	6.33	30.3	7.65	36.6
	0.08	30.6	3.02	9.0	4.54	13.6	6.05	18.1	7.56	22.6	9.08	27.1	2.72	8.1	4.23	12.7	5.75	17.2	7.26	21.7	8.78	26.2
	0.10	45.1	3.19	7.6	4.78	11.4	6.38	15.2	7.97	19.1	9.57	22.9	2.87	6.9	4.46	10.7	6.06	14.5	7.65	18.3	9.25	22.1
1200	0.03	6.6	2.33	18.6	3.50	27.9	4.67	37.2	5.84	46.5	7.00	55.8	2.10	16.7	3.27	26.0	4.43	35.4	5.60	44.7	6.77	54.0
	0.05	16.0	2.89	13.9	4.34	20.8	5.79	27.7	7.24	34.6	8.69	41.6	2.60	12.5	4.05	19.4	5.50	26.3	6.95	33.2	8.40	40.2
	0.08	36.0	3.36	10.1	5.05	15.1	6.73	20.1	8.42	25.2	10.10	30.2	3.03	9.1	4.71	14.1	6.40	19.1	8.08	24.1	9.77	29.2
	0.09	44.2	3.47	9.2	5.21	13.8	6.95	18.5	8.69	23.1	10.42	27.7	3.12	8.3	4.86	12.9	6.60	17.5	8.34	22.1	10.08	26.8
1400	0.03	7.3	2.54	20.3	3.81	30.4	5.09	40.5	6.36	50.7	7.63	60.8	2.29	18.2	3.56	28.4	4.83	38.5	6.10	48.6	7.38	58.8
	0.05	17.7	3.22	15.4	4.83	23.1	6.44	30.8	8.06	38.5	9.67	46.2	2.90	13.9	4.51	21.6	6.12	29.3	7.73	37.0	9.35	44.7
	0.08	39.9	3.81	11.4	5.71	17.1	7.62	22.8	9.52	28.5	11.43	34.1	3.43	10.2	5.33	15.9	7.24	21.6	9.14	27.3	11.05	33.0
	0.09	48.9	3.94	10.5	5.92	15.7	7.89	21.0	9.86	26.2	11.84	31.4	3.55	9.4	5.52	14.7	7.50	19.9	9.47	25.1	11.44	30.4

Note:To obtain accurate air volume and cooling/heating capacities,refer to pages 54-74

Ceiling Recessed Model-Large Air Volume Model 4-Row, High Temperature Rise

SRC-2SH-HT 220V

COOLING Capacity

Unit Size	Water Flow (l/sec)	W.P.D (kPa)	Entering Air Condition DB=24.0°C WB=17.8°C (55%)									Entering Air Condition DB=26.0°C WB=19.5°C (55%)								
			Entering Water Temperature									Entering Water Temperature								
			5°C			7°C			9°C			5°C			7°C			9°C		
			SH (kW)	TH (kW)	ΔWT (°C)	SH (kW)	TH (kW)	ΔWT (°C)	SH (kW)	TH (kW)	ΔWT (°C)	SH (kW)	TH (kW)	ΔWT (°C)	SH (kW)	TH (kW)	ΔWT (°C)	SH (kW)	TH (kW)	ΔWT (°C)
300	0.05	3.3	1.55	2.03	9.7	1.41	1.79	8.6	1.28	1.55	7.4	1.67	2.31	11.1	1.52	2.07	9.9	1.38	1.83	8.8
	0.10	11.0	1.95	2.73	6.5	1.76	2.41	5.8	1.59	2.07	4.9	2.10	3.13	7.5	1.91	2.80	6.7	1.73	2.46	5.9
	0.15	22.2	2.11	3.10	4.9	1.91	2.73	4.3	1.72	2.33	3.7	2.29	3.56	5.7	2.08	3.19	5.1	1.88	2.80	4.5
	0.20	36.6	2.20	3.33	4.0	1.99	2.93	3.5	1.78	2.51	3.0	2.39	3.84	4.6	2.17	3.43	4.1	1.96	3.01	3.6
400	0.05	4.8	2.16	2.81	13.4	1.97	2.49	11.9	1.79	2.16	10.3	2.31	3.18	15.2	2.11	2.86	13.7	1.92	2.53	12.1
	0.10	15.8	2.84	3.96	9.5	2.58	3.50	8.4	2.33	3.01	7.2	3.05	4.52	10.8	2.78	4.05	9.7	2.53	3.57	8.5
	0.15	31.9	3.16	4.60	7.3	2.86	4.05	6.5	2.58	3.49	5.6	3.40	5.26	8.4	3.10	4.72	7.5	2.81	4.15	6.6
	0.20	52.4	3.34	5.02	6.0	3.02	4.42	5.3	2.72	3.79	4.5	3.60	5.76	6.9	3.28	5.16	6.2	2.97	4.53	5.4
600	0.05	5.5	2.32	3.04	14.6	2.11	2.69	12.9	1.92	2.33	11.2	2.48	3.45	16.5	2.26	3.10	14.8	2.06	2.74	13.1
	0.10	18.4	3.07	4.32	10.3	2.79	3.82	9.1	2.52	3.29	7.9	3.30	4.93	11.8	3.01	4.42	10.6	2.73	3.90	9.3
	0.15	37.0	3.43	5.05	8.0	3.11	4.45	7.1	2.80	3.82	6.1	3.70	5.78	9.2	3.37	5.18	8.3	3.05	4.55	7.3
	0.17	46.0	3.53	5.26	7.4	3.19	4.63	6.5	2.87	3.98	5.6	3.81	6.03	8.5	3.47	5.40	7.6	3.14	4.75	6.7
800	0.05	7.2	2.82	3.67	17.6	2.57	3.25	15.6	2.34	2.83	13.5	3.00	4.15	19.8	2.74	3.73	17.8	2.50	3.30	15.8
	0.10	23.8	3.90	5.45	13.0	3.54	4.81	11.5	3.20	4.16	9.9	4.18	6.20	14.8	3.81	5.56	13.3	3.47	4.91	11.7
	0.13	37.5	4.28	6.14	11.3	3.88	5.42	10.0	3.50	4.67	8.6	4.59	7.00	12.9	4.19	6.28	11.6	3.80	5.53	10.2
	0.15	48.0	4.47	6.52	10.4	4.05	5.75	9.2	3.65	4.95	7.9	4.80	7.44	11.9	4.38	6.67	10.6	3.97	5.87	9.4
1000	0.10	4.1	4.23	5.44	13.0	3.84	4.81	11.5	3.49	4.17	10.0	4.51	6.16	14.7	4.12	5.54	13.2	3.75	4.89	11.7
	0.20	13.6	5.57	7.68	9.2	5.05	6.78	8.1	4.56	5.84	7.0	5.98	8.76	10.5	5.45	7.86	9.4	4.95	6.92	8.3
	0.30	27.4	6.20	8.92	7.1	5.61	7.86	6.3	5.05	6.76	5.4	6.68	10.21	8.1	6.08	9.15	7.3	5.51	8.05	6.4
	0.40	45.1	6.55	9.74	5.8	5.93	8.57	5.1	5.33	7.35	4.4	7.08	11.17	6.7	6.44	10.01	6.0	5.83	8.79	5.3
1200	0.10	4.8	4.60	5.95	14.2	4.18	5.27	12.6	3.81	4.57	10.9	4.90	6.74	16.1	4.48	6.06	14.5	4.08	5.35	12.8
	0.20	16.0	6.11	8.48	10.1	5.54	7.49	9.0	5.01	6.46	7.7	6.55	9.66	11.5	5.97	8.67	10.4	5.42	7.64	9.1
	0.30	32.2	6.82	9.90	7.9	6.18	8.73	7.0	5.57	7.51	6.0	7.34	11.32	9.0	6.69	10.15	8.1	6.07	8.93	7.1
	0.35	42.1	7.06	10.42	7.1	6.39	9.18	6.3	5.76	7.89	5.4	7.60	11.92	8.1	6.92	10.68	7.3	6.28	9.39	6.4
1400	0.10	5.3	5.14	6.58	15.7	4.68	5.83	13.9	4.26	5.07	12.1	5.47	7.44	17.8	5.00	6.69	16.0	4.56	5.92	14.1
	0.20	17.7	7.02	9.63	11.5	6.37	8.51	10.2	5.76	7.35	8.8	7.52	10.96	13.1	6.86	9.84	11.8	6.23	8.68	10.4
	0.30	35.7	7.96	11.41	9.1	7.22	10.07	8.0	6.51	8.67	6.9	8.56	13.03	10.4	7.80	11.69	9.3	7.08	10.29	8.2
	0.35	46.6	8.28	12.07	8.2	7.50	10.64	7.3	6.76	9.15	6.2	8.91	13.80	9.4	8.12	12.37	8.4	7.36	10.88	7.4

HEATING Capacity

Unit Size	Water Flow (l/sec)	W.P.D (kPa)	Entering Air Condition DB=20.0°C										Entering Air Condition DB=22.0°C									
			Entering Water Temperature										Entering Water Temperature									
			40°C		50°C		60°C		70°C		80°C		40°C		50°C		60°C		70°C		80°C	
			TH (kW)	ΔWT (°C)	TH (kW)	ΔWT (°C)	TH (kW)	ΔWT (°C)	TH (kW)	ΔWT (°C)	TH (kW)	ΔWT (°C)	TH (kW)	ΔWT (°C)	TH (kW)	ΔWT (°C)	TH (kW)	ΔWT (°C)	TH (kW)	ΔWT (°C)	TH (kW)	ΔWT (°C)
300	0.05	3.3	2.16	10.3	3.24	15.5	4.32	20.7	5.40	25.8	6.49	31.0	1.94	9.3	3.02	14.5	4.11	19.6	5.19	24.8	6.27	30.0
	0.10	11.0	2.50	6.0	3.75	9.0	5.00	12.0	6.26	15.0	7.51	17.9	2.25	5.4	3.50	8.4	4.75	11.4	6.01	14.4	7.26	17.4
	0.15	22.2	2.64	4.2	3.97	6.3	5.29	8.4	6.62	10.5	7.94	12.7	2.38	3.8	3.70	5.9	5.03	8.0	6.35	10.1	7.68	12.2
	0.20	36.6	2.73	3.3	4.09	4.9	5.46	6.5	6.82	8.2	8.19	9.8	2.45	2.9	3.82	4.6	5.18	6.2	6.55	7.8	7.92	9.5
400	0.05	4.8	3.03	14.5	4.55	21.8	6.07	29.0	7.58	36.3	9.10	43.5	2.73	13.1	4.24	20.3	5.76	27.6	7.28	34.8	8.80	42.1
	0.10	15.8	3.73	8.9	5.60	13.4	7.47	17.9	9.34	22.3	11.20	26.8	3.36	8.0	5.23	12.5	7.09	17.0	8.96	21.4	10.83	25.9
	0.15	31.9	4.05	6.5	6.08	9.7	8.11	12.9	10.14	16.2	12.16	19.4	3.65	5.8	5.67	9.0	7.70	12.3	9.73	15.5	11.76	18.7
	0.20	52.4	4.24	5.1	6.36	7.6	8.48	10.1	10.60	12.7	12.73	15.2	3.81	4.6	5.94	7.1	8.06	9.6	10.18	12.2	12.30	14.7
600	0.05	5.5	3.22	15.4	4.83	23.1	6.44	30.8	8.05	38.5	9.66	46.2	2.90	13.9	4.51	21.6	6.12	29.3	7.73	37.0	9.34	44.7
	0.10	18.4	4.01	9.6	6.02	14.4	8.03	19.2	10.04	24.0	12.05	28.8	3.61	8.6	5.62	13.4	7.63	18.2	9.64	23.0	11.65	27.8
	0.15	37.0	4.38	7.0	6.58	10.5	8.77	14.0	10.96	17.5	13.16	21.0	3.94	6.3	6.14	9.8	8.33	13.3	10.53	16.8	12.72	20.3
	0.17	46.0	4.48	6.3	6.72	9.5	8.97	12.6	11.21	15.8	13.45	18.9	4.03	5.7	6.28	8.8	8.52	12.0	10.76	15.1	13.00	18.3
800	0.05	7.2	3.90	18.6	5.85	28.0	7.80	37.3	9.75	46.6	11.70	55.9	3.51	16.8	5.46	26.1	7.41	35.4	9.36	44.8	11.31	54.1
	0.10	23.8	5.12	12.2	7.68	18.4	10.24	24.5	12.80	30.6	15.36	36.7	4.61	11.0	7.17	17.1	9.73	23.3	12.29	29.4	14.85	35.5
	0.13	37.5	5.52	10.2	8.29	15.2	11.05	20.3	13.81	25.4	16.58	30.5	4.97	9.1	7.73	14.2	10.50	19.3	13.26	24.4	16.03	29.5
	0.15	48.0	5.73	9.1	8.59	13.7	11.46	18.3	14.32	22.8	17.19	27.4	5.15	8.2	8.02	12.8	10.88	17.3	13.75	21.9	16.61	26.5
1000	0.10	4.1	5.93	14.2	8.89	21.2	11.86	28.3	14.82	35.4	17.79	42.5	5.33	12.7	8.30	19.8	11.26	26.9	14.23	34.0	17.19	41.1
	0.20	13.6	7.26	8.7	10.89	13.0	14.53	17.4	18.16	21.7	21.80	26.0	6.53	7.8	10.17	12.2	13.80	16.5	17.43	20.8	21.07	25.2
	0.30	27.4	7.87	6.3	11.81	9.4	15.75	12.5	19.68	15.7	23.62	18.8	7.08	5.6	11.02	8.8	14.96	11.9	18.90	15.1	22.83	18.2
	0.40	45.1	8.23	4.9	12.34	7.4	16.46	9.8	20.57	12.3	24.69	14.7	7.40	4.4	11.52	6.9	15.63	9.3	19.75	11.8	23.86	14.3
1200	0.10	4.8	6.43	15.4	9.64	23.0	12.86	30.7	16.07	38.4	19.29	46.1	5.78	13.8	9.00	21.5	12.21	29.2	15.43	36.9	18.64	44.6
	0.20	16.0	8.01	9.6	12.02	14.4	16.03	19.2	20.04	23.9	24.05	28.7	7.21	8.6	11.22	13.4	15.23	18.2	19.24	23.0	23.25	27.8
	0.30	32.2	8.75	7.0	13.13	10.5	17.51	14.0	21.89	17.4	26.27	20.9	7.88	6.3	12.26	9.8	16.64	13.3	21.02	16.7	25.40	20.2
	0.35	42.1	9.00	6.1	13.50	9.2	18.00	12.3	22.50	15.4	27.00	18.4	8.10	5.5	12.60	8.6	17.10	11.7	21.60	14.7	26.10	17.8
1400	0.10	5.3	7.18	17.2	10.78	25.8	14.37	34.3	17.97	42.9	21.56	51.5	6.47	15.5	10.06	24.0	13.65	32.6	17.25	41.2	20.84	49.8
	0.20	17.7	9.22	11.0	13.84	16.5	18.45	22.0	23.07	27.6	27.68	33.1	8.30	9.9	12.91	15.4	17.53	20.9	22.14	26.5	26.76	32.0
	0.30	35.7	10.21	8.1	15.32	12.2	20.43	16.3	25.54	20.3	30.64	24.4	9.19	7.3	14.30	11.4	19.41	15.5	24.51	19.5	29.62	23.6
	0.35	46.6	10.54	7.2	15.81	10.8	21.08	14.4	26.36	18.0	31.63	21.6	9.48	6.5	14.76	10.1	20.03	13.7	25.30	17.3	30.57	20.9

Note:To obtain accurate air volume and cooling/heating capacities,refer to pages 54-74

Ceiling Recessed, High Static Model-High Static, Large Air Volume Model 4-Row Cooling/Heating

TCRH-2HW-4R 220V

COOLING Capacity

Unit Size	Water Flow (l/sec)	W.P.D (kPa)	Entering Air Condition DB=24.0°C WB=17.8°C (55%)									Entering Air Condition DB=26.0°C WB=19.5°C (55%)								
			Entering Water Temperature									Entering Water Temperature								
			5°C			7°C			9°C			5°C			7°C			9°C		
			SH (kW)	TH (kW)	ΔWT (°C)	SH (kW)	TH (kW)	ΔWT (°C)	SH (kW)	TH (kW)	ΔWT (°C)	SH (kW)	TH (kW)	ΔWT (°C)	SH (kW)	TH (kW)	ΔWT (°C)	SH (kW)	TH (kW)	ΔWT (°C)
600	0.10	3.3	3.62	4.61	11.03	3.29	4.08	9.76	2.98	3.53	8.44	3.87	5.24	12.53	3.53	4.71	11.25	3.21	4.15	9.93
	0.15	6.7	4.29	5.69	9.06	3.89	5.02	8.00	3.51	4.33	6.90	4.61	6.49	10.34	4.20	5.82	9.27	3.81	5.12	8.17
	0.20	11.0	4.71	6.43	7.68	4.26	5.67	6.77	3.84	4.87	5.83	5.07	7.35	8.79	4.62	6.59	7.88	4.19	5.80	6.93
	0.30	22.2	5.20	7.41	5.91	4.70	6.52	5.20	4.23	5.60	4.46	5.62	8.50	6.78	5.12	7.62	6.07	4.63	6.69	5.33
1000	0.10	1.4	4.36	5.06	12.09	3.98	4.49	10.75	3.64	3.93	9.39	4.61	5.69	13.60	4.22	5.12	12.25	3.86	4.54	10.86
	0.20	4.6	6.66	8.53	10.20	6.05	7.55	9.02	5.49	6.53	7.81	7.12	9.69	11.58	6.50	8.70	10.40	5.91	7.68	9.18
	0.30	9.3	7.64	10.43	8.31	6.92	9.20	7.33	6.25	7.93	6.32	8.22	11.91	9.49	7.49	10.68	8.51	6.79	9.40	7.49
	0.40	15.2	8.12	11.63	6.95	7.35	10.24	6.12	6.62	8.79	5.25	8.76	13.32	7.96	7.98	11.93	7.13	7.23	10.49	6.27
1200	0.15	0.5	4.67	5.40	8.61	4.26	4.79	7.64	3.89	4.17	6.66	4.97	6.10	9.72	4.55	5.48	8.74	4.14	4.85	7.74
	0.20	0.9	5.88	7.07	8.45	5.35	6.26	7.48	4.87	5.43	6.49	6.29	8.02	9.59	5.74	7.20	8.61	5.22	6.36	7.61
	0.30	1.8	7.45	9.49	7.56	6.75	8.38	6.67	6.11	7.23	5.76	8.00	10.83	8.62	7.30	9.71	7.74	6.62	8.55	6.81
	0.55	5.1	9.02	12.62	5.48	8.15	11.10	4.83	7.32	9.52	4.14	9.75	14.50	6.30	8.87	12.98	5.64	8.03	11.39	4.95
1600	0.20	1.0	7.06	8.34	9.97	6.43	7.40	8.84	5.87	6.44	7.70	7.51	9.43	11.27	6.86	8.47	10.13	6.26	7.50	8.96
	0.30	2.1	9.13	11.43	9.11	8.30	10.11	8.05	7.53	8.75	6.98	9.77	12.99	10.35	8.91	11.66	9.29	8.11	10.29	8.20
	0.40	3.4	10.36	13.54	8.09	9.39	11.95	7.14	8.49	10.31	6.16	11.12	15.44	9.22	10.14	13.85	8.27	9.20	12.20	7.29
	0.55	5.9	11.38	15.64	6.80	10.30	13.78	5.99	9.28	11.85	5.15	12.27	17.91	7.78	11.17	16.05	6.97	10.12	14.11	6.13
2000	0.30	2.7	10.68	13.56	10.80	9.71	12.00	9.56	8.82	10.40	8.29	11.41	15.38	12.25	10.42	13.82	11.01	9.48	12.20	9.72
	0.40	4.4	12.20	16.18	9.66	11.07	14.29	8.54	10.01	12.33	7.37	13.08	18.42	11.00	11.93	16.53	9.87	10.84	14.57	8.70
	0.55	7.7	13.51	18.85	8.19	12.24	16.62	7.22	11.03	14.29	6.21	14.55	21.55	9.36	13.26	19.32	8.39	12.02	16.99	7.38
	0.70	11.6	14.24	20.68	7.06	12.88	18.21	6.22	11.59	15.63	5.33	15.38	23.71	8.09	14.00	21.24	7.25	12.68	18.66	6.37

◀ 47

48

HEATING Capacity

Unit Size	Water Flow (l/sec)	W.P.D (kPa)	Entering Air Condition DB=20.0°C										Entering Air Condition DB=22.0°C									
			Entering Water Temperature										Entering Water Temperature									
			40°C		50°C		60°C		70°C		80°C		40°C		50°C		60°C		70°C		80°C	
			TH (kW)	ΔWT (°C)	TH (kW)	ΔWT (°C)	TH (kW)	ΔWT (°C)	TH (kW)	ΔWT (°C)	TH (kW)	ΔWT (°C)	TH (kW)	ΔWT (°C)	TH (kW)	ΔWT (°C)	TH (kW)	ΔWT (°C)	TH (kW)	ΔWT (°C)	TH (kW)	ΔWT (°C)
600	0.10	3.3	5.08	12.16	7.63	18.24	10.17	24.32	9.70	46.35	11.64	55.62	4.58	10.94	7.12	17.02	9.67	23.10	9.31	44.49	11.25	53.76
	0.15	6.7	5.69	9.07	8.53	13.60	11.38	18.13	12.72	30.40	15.26	36.48	5.12	8.16	7.96	12.69	10.81	17.23	12.21	29.18	14.75	35.26
	0.20	11.0	6.05	7.24	9.08	10.85	12.11	14.47	14.23	22.67	17.07	27.20	5.45	6.51	8.48	10.13	11.51	13.75	13.66	21.76	16.50	26.29
	0.30	22.2	6.48	5.17	9.72	7.75	12.97	10.33	15.14	18.09	18.17	21.71	5.83	4.65	9.08	7.23	12.32	9.81	14.54	17.37	17.56	20.99
1000	0.10	1.4	6.35	15.17	9.52	22.76	12.70	30.34	15.87	37.93	19.05	45.52	5.71	13.65	8.89	21.24	12.06	28.83	15.24	36.41	18.41	44.00
	0.20	4.6	8.38	10.01	12.57	15.02	16.76	20.02	20.95	25.03	25.14	30.04	7.54	9.01	11.73	14.02	15.92	19.02	20.11	24.03	24.30	29.03
	0.30	9.3	9.29	7.40	13.93	11.10	18.57	14.80	23.22	18.49	27.86	22.19	8.36	6.66	13.00	10.36	17.65	14.06	22.29	17.75	26.94	21.45
	0.40	15.2	9.82	5.87	14.74	8.81	19.65	11.74	24.57	14.68	29.48	17.61	8.84	5.28	13.76	8.22	18.67	11.15	23.59	14.09	28.50	17.02
1200	0.15	0.5	8.12	12.94	12.18	19.41	16.25	25.88	20.31	32.36	24.37	38.83	7.31	11.65	11.37	18.12	15.44	24.59	19.50	31.06	23.56	37.53
	0.20	0.9	8.98	10.74	13.48	16.11	17.97	21.47	22.47	26.84	26.96	32.21	8.09	9.66	12.58	15.03	17.07	20.40	21.57	25.77	26.06	31.14
	0.30	1.8	9.98	7.95	14.97	11.93	19.97	15.90	24.96	19.88	29.95	23.85	8.98	7.16	13.97	11.13	18.97	15.11	23.96	19.08	28.95	23.06
	0.55	5.1	11.09	4.82	16.63	7.23	22.18	9.64	27.73	12.05	33.27	14.45	9.98	4.34	15.52	6.75	21.07	9.15	26.62	11.56	32.16	13.97
1600	0.20	1.0	10.64	12.71	15.96	19.07	21.28	25.42	26.60	31.78	31.92	38.13	9.57	11.44	14.89	17.80	20.21	24.15	25.54	30.51	30.86	36.86
	0.30	2.1	12.18	9.71	18.28	14.56	24.37	19.41	30.47	24.26	36.56	29.12	10.96	8.74	17.06	13.59	23.15	18.44	29.25	23.29	35.34	28.15
	0.40	3.4	13.09	7.82	19.64	11.73	26.19	15.64	32.74	19.56	39.29	23.47	11.78	7.04	18.33	10.95	24.88	14.86	31.43	18.77	37.98	22.68
	0.55	5.9	13.95	6.06	20.92	9.09	27.90	12.12	34.87	15.15	41.85	18.18	12.55	5.45	19.53	8.48	26.50	11.51	33.48	14.54	40.45	17.57
2000	0.30	2.7	14.43	11.50	21.65	17.25	28.87	23.00	36.09	28.74	43.31	34.49	12.99	10.35	20.21	16.10	27.43	21.85	34.65	27.59	41.87	33.34
	0.40	4.4	15.73	9.40	23.59	14.09	31.46	18.79	39.33	23.49	47.19	28.19	14.15	8.46	22.02	13.15	29.89	17.85	37.75	22.55	45.62	27.25
	0.55	7.7	16.93	7.35	25.39	11.03	33.86	14.71	42.32	18.38	50.79	22.06	15.23	6.62	23.70	10.30	32.16	13.97	40.63	17.65	49.09	21.33
	0.70	11.6	17.70	6.04	26.55	9.06	35.40	12.08	44.25	15.10	53.10	18.12	15.93	5.44	24.78	8.46	33.63	11.48	42.48	14.50	51.33	17.52

Note:To obtain accurate air volume and cooling/heating capacities,refer to pages 54-74

Ceiling Recessed, High Static Model-High Static, Large Air Volume Model 6-Row Cooling/Heating

TCRH-2HW-6R 220V

COOLING Capacity

Unit Size	Water Flow (l/sec)	W.P.D (kPa)	Entering Air Condition DB=24.0°C WB=17.8°C (55%)									Entering Air Condition DB=26.0°C WB=19.5°C (55%)								
			Entering Water Temperature									Entering Water Temperature								
			5°C			7°C			9°C			5°C			7°C			9°C		
			SH (kW)	TH (kW)	ΔWT (°C)	SH (kW)	TH (kW)	ΔWT (°C)	SH (kW)	TH (kW)	ΔWT (°C)	SH (kW)	TH (kW)	ΔWT (°C)	SH (kW)	TH (kW)	ΔWT (°C)	SH (kW)	TH (kW)	ΔWT (°C)
600	0.10	1.6	3.76	4.58	10.95	3.42	4.05	9.69	3.11	3.51	8.40	4.02	5.19	12.42	3.67	4.66	11.15	3.34	4.12	9.85
	0.15	3.3	4.62	5.96	9.50	4.18	5.26	8.38	3.78	4.53	7.22	4.97	6.81	10.85	4.53	6.10	9.73	4.11	5.37	8.56
	0.20	5.5	5.07	6.84	8.17	4.58	6.02	7.20	4.12	5.16	6.17	5.47	7.84	9.37	4.98	7.02	8.40	4.51	6.17	7.37
	0.30	11.0	5.48	7.89	6.29	4.94	6.93	5.52	4.42	5.92	4.72	5.94	9.09	7.25	5.40	8.13	6.48	4.88	7.13	5.68
1000	0.10	0.3	3.29	3.59	8.59	3.00	3.19	7.64	2.76	2.80	6.70	3.48	4.03	9.65	3.18	3.63	8.69	2.91	3.22	7.71
	0.20	1.0	5.87	7.04	8.42	5.34	6.23	7.45	4.85	5.40	6.45	6.28	8.00	9.57	5.73	7.18	8.59	5.21	6.34	7.58
	0.30	2.1	7.14	9.09	7.24	6.47	8.01	6.38	5.84	6.90	5.50	7.69	10.39	8.28	7.00	9.31	7.42	6.35	8.19	6.53
	0.40	3.5	7.77	10.33	6.17	7.03	9.09	5.43	6.32	7.80	4.66	8.40	11.86	7.08	7.64	10.62	6.34	6.92	9.32	5.57
1200	0.15	0.8	5.52	6.46	10.30	5.03	5.73	9.13	4.59	4.98	7.94	5.88	7.31	11.65	5.37	6.57	10.47	4.90	5.81	9.26
	0.20	1.3	6.75	8.22	9.83	6.13	7.27	8.69	5.57	6.30	7.53	7.22	9.34	11.16	6.59	8.39	10.02	5.99	7.40	8.85
	0.30	2.6	8.22	10.63	8.47	7.45	9.37	7.47	6.72	8.07	6.43	8.85	12.15	9.68	8.06	10.89	8.68	7.31	9.58	7.64
	0.55	7.5	9.52	13.56	5.89	8.59	11.91	5.17	7.70	10.18	4.42	10.32	15.61	6.78	9.39	13.97	6.07	8.48	12.24	5.32
1600	0.20	1.5	8.06	9.66	11.55	7.34	8.57	10.24	6.69	7.45	8.90	8.57	10.92	13.05	7.84	9.82	11.74	7.15	8.69	10.38
	0.30	3.1	10.08	12.82	10.21	9.15	11.33	9.03	8.29	9.79	7.80	10.79	14.58	11.62	9.85	13.09	10.43	8.95	11.54	9.20
	0.40	5.1	11.19	14.88	8.89	10.14	13.12	7.84	9.15	11.29	6.75	12.03	17.00	10.15	10.97	15.24	9.10	9.95	13.41	8.01
	0.55	8.8	12.05	16.86	7.33	10.90	14.84	6.45	9.80	12.73	5.53	13.01	19.34	8.40	11.85	17.33	7.53	10.72	15.21	6.61
2000	0.30	4.0	11.75	15.14	12.06	10.68	13.39	10.67	9.69	11.59	9.23	12.55	17.17	13.68	11.46	15.43	12.29	10.43	13.62	10.85
	0.40	6.6	13.20	17.78	10.62	11.97	15.69	9.37	10.81	13.52	8.08	14.17	20.27	12.11	12.92	18.18	10.86	11.73	16.02	9.57
	0.55	11.4	14.38	20.40	8.86	13.01	17.96	7.80	11.71	15.42	6.70	15.51	23.37	10.15	14.12	20.94	9.10	12.79	18.40	7.99
	0.70	17.4	15.00	22.16	7.57	13.55	19.49	6.65	12.16	16.69	5.70	16.22	25.47	8.69	14.76	22.80	7.78	13.35	20.00	6.83

HEATING Capacity

Unit Size	Water Flow (l/sec)	W.P.D (kPa)	Entering Air Condition DB=20.0°C										Entering Air Condition DB=22.0°C									
			Entering Water Temperature										Entering Water Temperature									
			40°C		50°C		60°C		70°C		80°C		40°C		50°C		60°C		70°C		80°C	
			TH (kW)	ΔWT (°C)	TH (kW)	ΔWT (°C)	TH (kW)	ΔWT (°C)	TH (kW)	ΔWT (°C)	TH (kW)	ΔWT (°C)	TH (kW)	ΔWT (°C)	TH (kW)	ΔWT (°C)	TH (kW)	ΔWT (°C)	TH (kW)	ΔWT (°C)	TH (kW)	ΔWT (°C)
600	0.10	1.6	5.44	13.00	8.16	19.50	10.88	26.00	9.52	45.53	11.43	54.63	4.89	11.70	7.61	18.20	10.33	24.70	9.14	43.71	11.05	52.81
	0.15	3.3	6.06	9.65	9.09	14.48	12.12	19.31	13.60	32.49	16.32	38.99	5.45	8.69	8.48	13.51	11.51	18.34	13.05	31.19	15.77	37.69
	0.20	5.5	6.37	7.61	9.56	11.42	12.74	15.23	15.15	24.13	18.18	28.96	5.73	6.85	8.92	10.66	12.11	14.47	14.54	23.17	17.57	27.99
	0.30	11.0	6.69	5.33	10.03	7.99	13.38	10.66	15.93	19.03	19.12	22.84	6.02	4.80	9.36	7.46	12.71	10.12	15.29	18.27	18.48	22.08
1000	0.10	0.3	6.63	15.85	9.95	23.78	13.27	31.70	16.58	39.63	19.90	47.55	5.97	14.27	9.28	22.19	12.60	30.12	15.92	38.04	19.24	45.97
	0.20	1.0	8.55	10.21	12.82	15.32	17.10	20.43	21.37	25.54	25.65	30.64	7.69	9.19	11.97	14.30	16.24	19.41	20.52	24.51	24.79	29.62
	0.30	2.1	9.26	7.38	13.89	11.06	18.52	14.75	23.15	18.44	27.78	22.13	8.33	6.64	12.96	10.33	17.59	14.01	22.23	17.70	26.86	21.39
	0.40	3.5	9.63	5.76	14.45	8.63	19.27	11.51	24.09	14.39	28.91	17.27	8.67	5.18	13.49	8.06	18.31	10.94	23.12	13.81	27.94	16.69
1200	0.15	0.8	8.88	14.15	13.33	21.23	17.77	28.31	22.21	35.39	26.66	42.46	7.99	12.74	12.44	19.82	16.88	26.89	21.33	33.97	25.77	41.05
	0.20	1.3	9.80	11.71	14.70	17.57	19.61	23.43	24.51	29.28	29.41	35.14	8.82	10.54	13.72	16.40	18.63	22.25	23.53	28.11	28.43	33.97
	0.30	2.6	10.75	8.56	16.13	12.85	21.50	17.13	26.88	21.41	32.26	25.69	9.67	7.71	15.05	11.99	20.43	16.27	25.81	20.55	31.18	24.83
	0.55	7.5	11.64	5.06	17.46	7.59	23.28	10.12	29.11	12.64	34.93	15.17	10.47	4.55	16.30	7.08	22.12	9.61	27.94	12.14	33.76	14.67
1600	0.20	1.5	11.66	13.93	17.49	20.90	23.32	27.87	29.16	34.83	34.99	41.80	10.49	12.54	16.33	19.51	22.16	26.47	27.99	33.44	33.82	40.41
	0.30	3.1	13.28	10.58	19.93	15.87	26.57	21.16	33.22	26.45	39.86	31.74	11.95	9.52	18.60	14.81	25.24	20.10	31.89	25.40	38.53	30.69
	0.40	5.1	14.14	8.45	21.21	12.67	28.28	16.89	35.35	21.12	42.42	25.34	12.72	7.60	19.79	11.83	26.87	16.05	33.94	20.27	41.01	24.50
	0.55	8.8	14.86	6.46	22.30	9.69	29.73	12.92	37.16	16.14	44.60	19.37	13.38	5.81	20.81	9.04	28.24	12.27	35.68	15.50	43.11	18.73
2000	0.30	4.0	15.72	12.52	23.58	18.78	31.44	25.04	39.30	31.30	47.16	37.56	14.14	11.27	22.00	17.53	29.86	23.79	37.73	30.04	45.59	36.30
	0.40	6.6	16.99	10.15	25.49	15.22	33.98	20.30	42.48	25.37	50.98	30.45	15.29	9.13	23.79	14.21	32.28	19.28	40.78	24.36	49.28	29.43
	0.55	11.4	18.05	7.84	27.08	11.76	36.10	15.68	45.13	19.60	54.15	23.52	16.24	7.06	25.27	10.98	34.30	14.90	43.32	18.82	52.35	22.74
	0.70	17.4	18.66	6.37	28.00	9.56	37.33	12.74	46.66	15.93	56.00	19.11	16.80	5.73	26.13	8.92	35.46	12.10	44.80	15.29	54.13	18.47

Note:To obtain accurate air volume and cooling/heating capacities,refer to pages 54-74

Ceiling Recessed, High Static Model-High Static, Large Air Volume Model 3-Row Cooling, 1-Row Heating

TCRH-2HW-DC2 220V

COOLING Capacity

Unit Size	Water Flow (l/sec)	W.P.D (kPa)	Entering Air Condition DB=24.0°C WB=17.8°C (55%)									Entering Air Condition DB=26.0°C WB=19.5°C (55%)								
			Entering Water Temperature									Entering Water Temperature								
			5°C			7°C			9°C			5°C			7°C			9°C		
			SH (kW)	TH (kW)	ΔWT (°C)	SH (kW)	TH (kW)	ΔWT (°C)	SH (kW)	TH (kW)	ΔWT (°C)	SH (kW)	TH (kW)	ΔWT (°C)	SH (kW)	TH (kW)	ΔWT (°C)	SH (kW)	TH (kW)	ΔWT (°C)
600	0.10	0.8	2.89	3.38	8.09	2.63	3.00	7.17	2.40	2.60	6.23	3.09	3.83	9.17	2.82	3.44	8.24	2.57	3.04	7.28
	0.15	1.7	3.55	4.30	6.86	3.22	3.80	6.07	2.92	3.29	5.25	3.81	4.90	7.81	3.47	4.39	7.01	3.15	3.87	6.18
	0.20	2.8	3.98	4.96	5.93	3.61	4.38	5.23	3.27	3.78	4.52	4.28	5.66	6.77	3.90	5.07	6.07	3.54	4.47	5.34
	0.30	5.6	4.51	5.84	4.65	4.08	5.14	4.10	3.68	4.42	3.53	4.87	6.68	5.33	4.43	5.99	4.77	4.01	5.26	4.19
1000	0.10	1.0	3.79	4.35	10.41	3.45	3.86	9.24	3.16	3.37	8.07	4.02	4.91	11.74	3.68	4.42	10.56	3.36	3.91	9.35
	0.20	3.5	5.43	6.64	7.93	4.94	5.87	7.02	4.48	5.09	6.08	5.81	7.54	9.01	5.30	6.77	8.09	4.82	5.97	7.14
	0.30	7.0	6.29	7.98	6.36	5.70	7.05	5.62	5.16	6.09	4.85	6.75	9.10	7.25	6.16	8.16	6.50	5.59	7.19	5.73
	0.40	11.5	6.80	8.88	5.31	6.16	7.83	4.68	5.57	6.75	4.03	7.32	10.15	6.06	6.67	9.10	5.44	6.05	8.01	4.78
1200	0.15	2.6	5.33	6.46	10.30	4.85	5.72	9.12	4.41	4.96	7.91	5.70	7.33	11.67	5.20	6.58	10.49	4.73	5.81	9.26
	0.20	4.3	6.08	7.56	9.03	5.52	6.68	7.99	5.00	5.78	6.91	6.51	8.59	10.27	5.94	7.71	9.22	5.40	6.80	8.13
	0.30	8.8	7.03	9.08	7.24	6.37	8.02	6.39	5.75	6.91	5.51	7.56	10.37	8.26	6.89	9.30	7.41	6.25	8.19	6.52
	0.55	25.0	8.13	11.16	4.85	7.35	9.83	4.27	6.61	8.43	3.67	8.78	12.80	5.56	7.99	11.47	4.98	7.23	10.07	4.38
1600	0.20	5.1	7.27	8.95	10.69	6.61	7.92	9.47	6.01	6.87	8.21	7.76	10.14	12.12	7.08	9.11	10.89	6.45	8.05	9.62
	0.30	10.2	8.54	10.92	8.70	7.75	9.65	7.69	7.03	8.35	6.65	9.15	12.43	9.90	8.35	11.16	8.89	7.59	9.84	7.84
	0.40	16.8	9.34	12.28	7.34	8.47	10.84	6.48	7.65	9.35	5.59	10.03	14.01	8.37	9.14	12.56	7.51	8.30	11.06	6.61
	0.55	29.2	10.08	13.69	5.95	9.13	12.07	5.24	8.23	10.38	4.51	10.86	15.66	6.80	9.89	14.03	6.10	8.97	12.34	5.36
2000	0.30	13.3	10.11	13.04	10.39	9.18	11.53	9.18	8.32	9.97	7.94	10.83	14.83	11.81	9.88	13.31	10.61	8.98	11.74	9.36
	0.40	21.9	11.13	14.77	8.82	10.09	13.04	7.79	9.12	11.25	6.72	11.95	16.84	10.06	10.90	15.11	9.02	9.89	13.31	7.95
	0.55	38.0	12.11	16.59	7.21	10.96	14.63	6.36	9.89	12.59	5.47	13.04	18.97	8.24	11.88	17.00	7.39	10.77	14.96	6.50
	0.70	57.6	12.73	17.89	6.11	11.52	15.76	5.38	10.37	13.54	4.62	13.73	20.49	7.00	12.51	18.36	6.27	11.33	16.14	5.51

◀49·50

HEATING Capacity

Unit Size	Water Flow (l/sec)	W.P.D (kPa)	Entering Air Condition DB=20.0°C										Entering Air Condition DB=22.0°C									
			Entering Water Temperature										Entering Water Temperature									
			40°C		50°C		60°C		70°C		80°C		40°C		50°C		60°C		70°C		80°C	
			TH (kW)	ΔWT (°C)	TH (kW)	ΔWT (°C)	TH (kW)	ΔWT (°C)	TH (kW)	ΔWT (°C)	TH (kW)	ΔWT (°C)	TH (kW)	ΔWT (°C)	TH (kW)	ΔWT (°C)	TH (kW)	ΔWT (°C)	TH (kW)	ΔWT (°C)	TH (kW)	ΔWT (°C)
600	0.10	5.6	2.55	6.12	3.83	9.17	5.11	12.23	5.46	26.09	6.55	31.31	2.30	5.50	3.58	8.56	4.86	11.62	5.24	25.04	6.33	30.26
	0.15	11.2	2.73	4.35	4.09	6.52	5.46	8.70	6.39	15.29	7.67	18.35	2.45	3.91	3.82	6.09	5.18	8.26	6.14	14.68	7.42	17.73
	0.20	18.5	2.83	3.38	4.24	5.08	5.66	6.77	6.82	10.87	8.19	13.05	2.54	3.05	3.96	4.74	5.38	6.43	6.55	10.44	7.91	12.61
	0.30	37.3	2.95	2.35	4.43	3.53	5.91	4.71	7.08	8.46	8.49	10.15	2.66	2.12	4.13	3.30	5.61	4.47	6.79	8.12	8.21	9.81
1000	0.10	7.0	3.51	8.39	5.26	12.59	7.02	16.78	8.78	20.98	10.53	25.17	3.16	7.55	4.91	11.75	6.67	15.94	8.42	20.14	10.18	24.33
	0.20	23.1	4.01	4.80	6.02	7.20	8.03	9.60	10.04	12.00	12.05	14.40	3.61	4.32	5.62	6.72	7.63	9.12	9.64	11.52	11.65	13.92
	0.30	46.6	4.25	3.39	6.37	5.08	8.50	6.77	10.62	8.46	12.75	10.16	3.82	3.05	5.95	4.74	8.07	6.43	10.20	8.12	12.32	9.82
	0.40	76.7	4.39	2.62	6.59	3.94	8.78	5.25	10.98	6.56	13.18	7.87	3.95	2.36	6.15	3.67	8.34	4.99	10.54	6.30	12.74	7.61
1200	0.15	17.7	4.29	6.84	6.44	10.26	8.59	13.69	10.74	17.11	12.89	20.53	3.86	6.16	6.01	9.58	8.16	13.00	10.31	16.42	12.46	19.84
	0.20	29.0	4.52	5.41	6.79	8.11	9.05	10.82	11.32	13.52	13.58	16.23	4.07	4.87	6.33	7.57	8.60	10.28	10.86	12.98	13.13	15.69
	0.30	58.6	4.80	3.83	7.20	5.74	9.61	7.65	12.01	9.57	14.41	11.48	4.32	3.44	6.72	5.36	9.13	7.27	11.53	9.19	13.93	11.10
	0.55	167.1	5.13	2.23	7.70	3.35	10.27	4.46	12.84	5.58	15.40	6.69	4.62	2.01	7.19	3.12	9.75	4.24	12.32	5.35	14.89	6.47
1600	0.20	33.9	5.58	6.67	8.38	10.01	11.17	13.35	13.96	16.69	16.76	20.02	5.02	6.01	7.82	9.34	10.61	12.68	13.41	16.02	16.20	19.36
	0.30	68.4	6.00	4.78	9.00	7.17	12.00	9.56	15.00	11.95	18.00	14.34	5.40	4.30	8.40	6.69	11.40	9.08	14.40	11.47	17.40	13.86
	0.40	112.5	6.25	3.73	9.37	5.60	12.50	7.47	15.62	9.33	18.75	11.20	5.62	3.36	8.75	5.23	11.87	7.09	15.00	8.96	18.13	10.83
	0.55	195.2	6.49	2.82	9.74	4.23	12.99	5.64	16.23	7.05	19.48	8.46	5.84	2.54	9.09	3.95	12.34	5.36	15.58	6.77	18.83	8.18
2000	0.30	89.0	7.30	5.82	10.95	8.72	14.60	11.63	18.26	14.54	21.91	17.45	6.57	5.23	10.22	8.14	13.87	11.05	17.53	13.96	21.18	16.87
	0.40	146.4	7.65	4.57	11.48	6.86	15.30	9.14	19.13	11.43	22.96	13.71	6.88	4.11	10.71	6.40	14.54	8.69	18.37	10.97	22.19	13.26
	0.55	254.0	7.99	3.47	11.98	5.21	15.98	6.94	19.98	8.68	23.97	10.41	7.19	3.12	11.18	4.86	15.18	6.60	19.18	8.33	23.17	10.07
	0.70	385.4	8.21	2.80	12.32	4.21	16.43	5.61	20.54	7.01	24.65	8.41	7.39	2.52	11.50	3.93	15.61	5.33	19.72	6.73	23.83	8.13

Note:To obtain accurate air volume and cooling/heating capacities,refer to pages 54-74

Ceiling Recessed, High Static Model-High Static, Large Air Volume Model 4-Row Cooling, 1-Row Heating

TCRH-2HW-DC3 220V

COOLING Capacity

Unit Size	Water Flow (l/sec)	W.P.D (kPa)	Entering Air Condition DB=24.0°C WB=17.8°C (55%)									Entering Air Condition DB=26.0°C WB=19.5°C (55%)								
			Entering Water Temperature									Entering Water Temperature								
			5°C			7°C			9°C			5°C			7°C			9°C		
			SH (kW)	TH (kW)	ΔWT (°C)	SH (kW)	TH (kW)	ΔWT (°C)	SH (kW)	TH (kW)	ΔWT (°C)	SH (kW)	TH (kW)	ΔWT (°C)	SH (kW)	TH (kW)	ΔWT (°C)	SH (kW)	TH (kW)	ΔWT (°C)
600	0.10	1.1	3.20	3.88	9.28	2.91	3.43	8.21	2.65	2.98	7.12	3.42	4.40	10.52	3.12	3.95	9.45	2.84	3.49	8.35
	0.15	2.2	4.03	5.18	8.26	3.66	4.57	7.29	3.30	3.94	6.29	4.33	5.91	9.42	3.95	5.30	8.45	3.59	4.67	7.44
	0.20	3.7	4.50	6.04	7.22	4.07	5.32	6.36	3.67	4.57	5.47	4.85	6.92	8.27	4.42	6.20	7.41	4.00	5.45	6.51
	0.30	7.4	4.95	7.10	5.65	4.47	6.24	4.97	4.01	5.34	4.26	5.36	8.16	6.50	4.88	7.30	5.82	4.41	6.41	5.10
1000	0.10	1.4	4.14	4.90	11.71	3.78	4.34	10.39	3.45	3.79	9.06	4.40	5.52	13.20	4.02	4.97	11.87	3.67	4.40	10.52
	0.20	4.6	6.17	8.07	9.65	5.60	7.13	8.52	5.07	6.16	7.36	6.62	9.19	10.98	6.04	8.24	9.85	5.49	7.27	8.69
	0.30	9.3	7.00	9.76	7.77	6.34	8.60	6.85	5.71	7.39	5.89	7.55	11.17	8.90	6.87	10.01	7.97	6.23	8.80	7.01
	0.40	15.2	7.40	10.81	6.46	6.69	9.52	5.69	6.01	8.16	4.87	7.99	12.41	7.42	7.28	11.11	6.64	6.58	9.76	5.83
1200	0.15	0.5	4.53	5.29	8.43	4.12	4.69	7.47	3.76	4.08	6.50	4.83	5.98	9.54	4.41	5.38	8.57	4.02	4.75	7.58
	0.20	0.9	5.66	6.88	8.22	5.14	6.09	7.28	4.67	5.27	6.31	6.06	7.82	9.34	5.53	7.02	8.39	5.03	6.19	7.40
	0.30	1.8	7.10	9.15	7.29	6.43	8.07	6.43	5.81	6.96	5.54	7.64	10.45	8.33	6.96	9.37	7.47	6.31	8.25	6.57
	0.55	5.1	8.50	12.05	5.24	7.67	10.60	4.61	6.88	9.07	3.94	9.20	13.86	6.02	8.37	12.40	5.39	7.57	10.88	4.73
1600	0.20	1.0	6.81	8.14	9.73	6.20	7.21	8.62	5.65	6.27	7.49	7.25	9.21	11.01	6.63	8.28	9.89	6.04	7.32	8.75
	0.30	2.1	8.72	11.05	8.80	7.91	9.76	7.78	7.17	8.44	6.73	9.34	12.57	10.01	8.52	11.28	8.99	7.74	9.95	7.93
	0.40	3.4	9.83	13.01	7.77	8.90	11.47	6.86	8.04	9.89	5.91	10.57	14.86	8.88	9.63	13.32	7.96	8.74	11.72	7.01
	0.55	5.9	10.74	14.95	6.50	9.71	13.17	5.72	8.74	11.30	4.91	11.59	17.14	7.45	10.56	15.36	6.67	9.56	13.49	5.86
2000	0.30	2.7	10.25	13.17	10.49	9.31	11.64	9.28	8.44	10.08	8.03	10.96	14.95	11.91	10.01	13.43	10.70	9.10	11.85	9.44
	0.40	4.4	11.63	15.61	9.33	10.54	13.78	8.23	9.53	11.88	7.10	12.49	17.80	10.63	11.39	15.97	9.54	10.34	14.07	8.40
	0.55	7.7	12.81	18.10	7.86	11.59	15.94	6.93	10.44	13.70	5.95	13.81	20.72	9.00	12.58	18.57	8.07	11.40	16.32	7.09
	0.70	11.6	13.46	19.80	6.76	12.16	17.42	5.95	10.93	14.93	5.10	14.55	22.73	7.76	13.24	20.35	6.95	11.98	17.87	6.10

HEATING Capacity

Unit Size	Water Flow (l/sec)	W.P.D (kPa)	Entering Air Condition DB=20.0°C										Entering Air Condition DB=22.0°C									
			Entering Water Temperature										Entering Water Temperature									
			40°C		50°C		60°C		70°C		80°C		40°C		50°C		60°C		70°C		80°C	
			TH (kW)	ΔWT (°C)	TH (kW)	ΔWT (°C)	TH (kW)	ΔWT (°C)	TH (kW)	ΔWT (°C)	TH (kW)	ΔWT (°C)	TH (kW)	ΔWT (°C)	TH (kW)	ΔWT (°C)	TH (kW)	ΔWT (°C)	TH (kW)	ΔWT (°C)	TH (kW)	ΔWT (°C)
600	0.10	5.6	2.43	5.82	3.65	8.73	4.87	11.64	5.23	25.01	6.28	30.01	2.19	5.24	3.41	8.15	4.63	11.06	5.02	24.01	6.07	29.01
	0.15	11.2	2.59	4.13	3.88	6.19	5.18	8.25	6.09	14.55	7.31	17.46	2.33	3.71	3.62	5.78	4.92	7.84	5.84	13.97	7.06	16.88
	0.20	18.5	2.68	3.20	4.02	4.81	5.36	6.41	6.47	10.32	7.77	12.38	2.41	2.88	3.75	4.49	5.09	6.09	6.21	9.90	7.51	11.97
	0.30	37.3	2.79	2.22	4.18	3.34	5.58	4.45	6.70	8.01	8.04	9.61	2.51	2.00	3.91	3.11	5.30	4.23	6.43	7.69	7.78	9.29
1000	0.10	7.0	3.30	7.89	4.95	11.83	6.60	15.78	8.25	19.72	9.90	23.66	2.97	7.10	4.62	11.04	6.27	14.99	7.92	18.93	9.57	22.88
	0.20	23.1	3.74	4.47	5.61	6.71	7.49	8.95	9.36	11.18	11.23	13.42	3.37	4.03	5.24	6.26	7.11	8.50	8.98	10.74	10.86	12.97
	0.30	46.6	3.94	3.14	5.91	4.71	7.89	6.29	9.86	7.86	11.83	9.43	3.55	2.83	5.52	4.40	7.49	5.97	9.47	7.54	11.44	9.11
	0.40	76.7	4.06	2.43	6.10	3.64	8.13	4.86	10.17	6.07	12.20	7.29	3.66	2.19	5.69	3.40	7.73	4.62	9.76	5.83	11.79	7.05
1200	0.15	17.7	4.12	6.57	6.19	9.86	8.25	13.15	10.31	16.43	12.38	19.72	3.71	5.92	5.77	9.20	7.84	12.49	9.90	15.78	11.96	19.06
	0.20	29.0	4.34	5.18	6.51	7.78	8.68	10.37	10.85	12.96	13.02	15.55	3.90	4.67	6.07	7.26	8.24	9.85	10.41	12.44	12.58	15.04
	0.30	58.6	4.59	3.66	6.89	5.49	9.19	7.32	11.48	9.15	13.78	10.98	4.13	3.29	6.43	5.12	8.73	6.95	11.02	8.78	13.32	10.61
	0.55	167.1	4.89	2.13	7.34	3.19	9.79	4.25	12.23	5.32	14.68	6.38	4.40	1.91	6.85	2.98	9.30	4.04	11.74	5.10	14.19	6.17
1600	0.20	33.9	5.35	6.39	8.02	9.59	10.70	12.78	13.37	15.98	16.05	19.17	4.81	5.75	7.49	8.95	10.16	12.14	12.84	15.34	15.51	18.53
	0.30	68.4	5.72	4.56	8.59	6.84	11.45	9.12	14.32	11.40	17.18	13.68	5.15	4.11	8.01	6.39	10.88	8.67	13.74	10.95	16.61	13.23
	0.40	112.5	5.95	3.56	8.93	5.34	11.91	7.11	14.89	8.89	17.86	10.67	5.36	3.20	8.33	4.98	11.31	6.76	14.29	8.54	17.27	10.32
	0.55	195.2	6.17	2.68	9.26	4.02	12.35	5.37	15.44	6.71	18.53	8.05	5.55	2.41	8.64	3.76	11.73	5.10	14.82	6.44	17.91	7.78
2000	0.30	89.0	7.00	5.57	10.50	8.36	14.00	11.15	17.50	13.94	21.00	16.72	6.30	5.02	9.80	7.80	13.30	10.59	16.80	13.38	20.30	16.17
	0.40	146.4	7.32	4.37	10.98	6.56	14.64	8.75	18.30	10.93	21.96	13.12	6.58	3.94	10.25	6.12	13.91	8.31	17.57	10.49	21.23	12.68
	0.55	254.0	7.63	3.31	11.44	4.97	15.26	6.63	19.07	8.29	22.89	9.94	6.86	2.98	10.68	4.64	14.49	6.30	18.31	7.95	22.12	9.61
	0.70	385.4	7.83	2.67	11.75	4.01	15.67	5.35	19.59	6.69	23.50	8.02	7.05	2.41	10.97	3.74	14.88	5.08	18.80	6.42	22.72	7.76

Note:To obtain accurate air volume and cooling/heating capacities,refer to pages 54-74

Ceiling Recessed, High Static Model-High Static, Large Air Volume Model 4-Row Cooling, 2-Row Heating

TCRH-2HW-DC4 220V

COOLING Capacity

Unit Size	Water Flow (l/sec)	W.P.D (kPa)	Entering Air Condition DB=24.0°C WB=17.8°C (55%)									Entering Air Condition DB=26.0°C WB=19.5°C (55%)								
			Entering Water Temperature									Entering Water Temperature								
			5°C			7°C			9°C			5°C			7°C			9°C		
			SH (kW)	TH (kW)	ΔWT (°C)	SH (kW)	TH (kW)	ΔWT (°C)	SH (kW)	TH (kW)	ΔWT (°C)	SH (kW)	TH (kW)	ΔWT (°C)	SH (kW)	TH (kW)	ΔWT (°C)	SH (kW)	TH (kW)	ΔWT (°C)
600	0.10	1.1	3.07	3.77	9.01	2.79	3.33	7.97	2.53	2.88	6.90	3.29	4.28	10.23	3.00	3.84	9.19	2.73	3.39	8.11
	0.15	2.2	3.83	4.98	7.94	3.47	4.39	7.01	3.13	3.78	6.04	4.12	5.69	9.07	3.76	5.10	8.14	3.40	4.49	7.16
	0.20	3.7	4.24	5.77	6.90	3.84	5.08	6.08	3.45	4.36	5.22	4.59	6.62	7.91	4.17	5.93	7.09	3.78	5.21	6.23
	0.30	7.4	4.64	6.75	5.38	4.19	5.93	4.72	3.75	5.07	4.04	5.03	7.77	6.19	4.58	6.95	5.54	4.13	6.09	4.85
1000	0.10	1.4	3.97	4.76	11.38	3.61	4.22	10.09	3.30	3.67	8.78	4.22	5.38	12.85	3.86	4.83	11.56	3.52	4.28	10.23
	0.20	4.6	5.80	7.70	9.20	5.26	6.80	8.12	4.75	5.86	7.00	6.23	8.78	10.50	5.68	7.88	9.42	5.15	6.94	8.29
	0.30	9.3	6.52	9.23	7.36	5.89	8.13	6.48	5.30	6.98	5.56	7.04	10.58	8.43	6.41	9.48	7.55	5.80	8.33	6.64
	0.40	15.2	6.85	10.19	6.09	6.19	8.96	5.35	5.55	7.67	4.58	7.42	11.72	7.00	6.75	10.49	6.27	6.10	9.20	5.50
1200	0.15	0.5	4.40	5.19	8.27	4.00	4.59	7.32	3.64	3.99	6.37	4.69	5.88	9.36	4.28	5.28	8.41	3.90	4.66	7.44
	0.20	0.9	5.46	6.71	8.02	4.96	5.93	7.09	4.50	5.13	6.14	5.85	7.63	9.12	5.34	6.85	8.19	4.85	6.04	7.22
	0.30	1.8	6.79	8.85	7.05	6.15	7.80	6.22	5.55	6.72	5.35	7.32	10.12	8.06	6.66	9.07	7.23	6.04	7.98	6.36
	0.55	5.1	8.06	11.56	5.02	7.27	10.16	4.42	6.52	8.69	3.78	8.74	13.31	5.78	7.94	11.91	5.17	7.18	10.44	4.54
1600	0.20	1.0	6.59	7.95	9.51	5.99	7.04	8.42	5.45	6.12	7.31	7.03	9.01	10.77	6.42	8.10	9.68	5.84	7.16	8.55
	0.30	2.1	8.36	10.71	8.54	7.59	9.46	7.54	6.86	8.17	6.51	8.98	12.21	9.73	8.19	10.95	8.73	7.43	9.65	7.69
	0.40	3.4	9.38	12.55	7.50	8.49	11.07	6.61	7.66	9.52	5.69	10.10	14.36	8.58	9.20	12.87	7.69	8.34	11.32	6.76
	0.55	5.9	10.20	14.37	6.25	9.22	12.65	5.50	8.29	10.85	4.71	11.03	16.50	7.17	10.04	14.77	6.42	9.08	12.97	5.64
2000	0.30	2.7	9.87	12.81	10.21	8.96	11.32	9.02	8.12	9.79	7.80	10.58	14.57	11.61	9.65	13.08	10.42	8.77	11.54	9.19
	0.40	4.4	11.14	15.12	9.03	10.09	13.33	7.97	9.11	11.48	6.86	11.98	17.26	10.31	10.92	15.48	9.25	9.91	13.62	8.14
	0.55	7.7	12.21	17.45	7.58	11.04	15.36	6.67	9.93	13.18	5.73	13.19	20.00	8.69	12.01	17.92	7.78	10.87	15.74	6.84
	0.70	11.6	12.80	19.05	6.50	11.56	16.75	5.72	10.37	14.34	4.90	13.85	21.89	7.47	12.60	19.59	6.69	11.40	17.19	5.87

◀51·52

HEATING Capacity

Unit Size	Water Flow (l/sec)	W.P.D (kPa)	Entering Air Condition DB=20.0°C										Entering Air Condition DB=22.0°C									
			Entering Water Temperature										Entering Water Temperature									
			40°C		50°C		60°C		70°C		80°C		40°C		50°C		60°C		70°C		80°C	
			TH (kW)	ΔWT (°C)	TH (kW)	ΔWT (°C)	TH (kW)	ΔWT (°C)	TH (kW)	ΔWT (°C)	TH (kW)	ΔWT (°C)	TH (kW)	ΔWT (°C)	TH (kW)	ΔWT (°C)	TH (kW)	ΔWT (°C)	TH (kW)	ΔWT (°C)	TH (kW)	ΔWT (°C)
600	0.10	1.7	3.48	8.33	5.22	12.49	6.97	16.65	7.14	34.12	8.56	40.94	3.13	7.49	4.87	11.66	6.62	15.82	6.85	32.75	8.28	39.58
	0.15	3.4	3.77	6.01	5.66	9.02	7.54	12.02	8.71	20.81	10.45	24.98	3.39	5.41	5.28	8.42	7.17	11.42	8.36	19.98	10.10	24.14
	0.20	5.6	3.94	4.71	5.91	7.07	7.88	9.42	9.43	15.03	11.32	18.03	3.55	4.24	5.52	6.60	7.49	8.95	9.05	14.43	10.94	17.43
	0.30	11.2	4.14	3.30	6.21	4.95	8.28	6.60	9.86	11.78	11.83	14.14	3.72	2.97	5.79	4.62	7.87	6.27	9.46	11.31	11.43	13.66
1000	0.10	2.1	4.60	11.00	6.90	16.49	9.20	21.99	11.50	27.49	13.80	32.99	4.14	9.90	6.44	15.39	8.74	20.89	11.04	26.39	13.34	31.89
	0.20	7.0	5.41	6.47	8.12	9.70	10.83	12.94	13.54	16.17	16.24	19.41	4.87	5.82	7.58	9.06	10.29	12.29	12.99	15.53	15.70	18.76
	0.30	14.1	5.78	4.60	8.67	6.90	11.56	9.21	14.45	11.51	17.34	13.81	5.20	4.14	8.09	6.44	10.98	8.75	13.87	11.05	16.76	13.35
	0.40	23.1	5.99	3.58	8.99	5.37	11.98	7.16	14.98	8.95	17.98	10.74	5.39	3.22	8.39	5.01	11.38	6.80	14.38	8.59	17.38	10.38
1200	0.15	5.3	5.88	9.37	8.82	14.05	11.76	18.74	14.70	23.42	17.64	28.11	5.29	8.43	8.23	13.12	11.17	17.80	14.11	22.49	17.05	27.17
	0.20	8.8	6.28	7.51	9.42	11.26	12.56	15.01	15.70	18.76	18.85	22.52	5.65	6.76	8.79	10.51	11.93	14.26	15.08	18.01	18.22	21.77
	0.30	17.7	6.76	5.38	10.14	8.08	13.52	10.77	16.90	13.46	20.28	16.15	6.08	4.85	9.46	7.54	12.84	10.23	16.22	12.92	19.60	15.61
	0.55	50.4	7.30	3.17	10.95	4.76	14.61	6.35	18.26	7.93	21.91	9.52	6.57	2.86	10.22	4.44	13.88	6.03	17.53	7.62	21.18	9.20
1600	0.20	10.2	7.66	9.16	11.50	13.74	15.33	18.32	19.17	22.90	23.00	27.48	6.90	8.24	10.73	12.83	14.57	17.41	18.40	21.99	22.24	26.57
	0.30	20.6	8.37	6.67	12.56	10.01	16.75	13.34	20.94	16.68	25.13	20.02	7.54	6.00	11.73	9.34	15.92	12.68	20.10	16.01	24.29	19.35
	0.40	33.9	8.80	5.26	13.20	7.89	17.60	10.52	22.01	13.15	26.41	15.77	7.92	4.73	12.32	7.36	16.72	9.99	21.12	12.62	25.53	15.25
	0.55	58.9	9.20	4.00	13.80	6.00	18.41	8.00	23.01	10.00	27.61	12.00	8.28	3.60	12.88	5.60	17.49	7.60	22.09	9.60	26.69	11.60
2000	0.30	26.8	10.07	8.02	15.11	12.03	20.14	16.04	25.18	20.06	30.22	24.07	9.06	7.22	14.10	11.23	19.14	15.24	24.17	19.25	29.21	23.26
	0.40	44.1	10.67	6.37	16.00	9.56	21.34	12.75	26.68	15.94	32.01	19.12	9.60	5.74	14.94	8.92	20.27	12.11	25.61	15.30	30.95	18.48
	0.55	76.6	11.24	4.88	16.86	7.32	22.48	9.76	28.10	12.21	33.72	14.65	10.11	4.39	15.73	6.84	21.35	9.28	26.97	11.72	32.59	14.16
	0.70	116.2	11.61	3.96	17.41	5.94	23.22	7.93	29.02	9.91	34.83	11.89	10.44	3.57	16.25	5.55	22.06	7.53	27.86	9.51	33.67	11.49

Note:To obtain accurate air volume and cooling/heating capacities,refer to pages 54-74

Ceiling Recessed, High Static Model-High Static, Large Air Volume Model 6-Row Cooling/Heating

TCRH-2HW-HT 220V

COOLING Capacity

Unit Size	Water Flow (l/sec)	W.P.D (kPa)	Entering Air Condition DB=24.0°C WB=17.8°C (55%)									Entering Air Condition DB=26.0°C WB=19.5°C (55%)								
			Entering Water Temperature									Entering Water Temperature								
			5°C			7°C			9°C			5°C			7°C			9°C		
			SH (kW)	TH (kW)	ΔWT (°C)	SH (kW)	TH (kW)	ΔWT (°C)	SH (kW)	TH (kW)	ΔWT (°C)	SH (kW)	TH (kW)	ΔWT (°C)	SH (kW)	TH (kW)	ΔWT (°C)	SH (kW)	TH (kW)	ΔWT (°C)
600	0.10	10.9	4.23	5.66	13.53	3.84	5.01	11.97	3.49	4.33	10.36	4.51	6.42	15.34	4.12	5.76	13.78	3.75	5.09	12.18
	0.15	21.9	4.87	6.96	11.09	4.41	6.13	9.77	3.97	5.27	8.41	5.24	7.95	12.66	4.77	7.13	11.36	4.33	6.27	9.99
	0.20	36.0	5.18	7.77	9.29	4.68	6.84	8.18	4.20	5.86	7.01	5.60	8.92	10.66	5.09	7.99	9.55	4.61	7.02	8.39
	0.30	72.7	5.45	8.81	7.02	4.92	7.74	6.17	4.40	6.61	5.26	5.92	10.15	8.09	5.38	9.08	7.24	4.86	7.96	6.34
1000	0.10	13.6	5.18	6.78	16.20	4.73	6.02	14.40	4.32	5.25	12.56	5.47	7.60	18.18	5.01	6.85	16.38	4.59	6.08	14.54
	0.20	45.2	6.97	10.21	12.20	6.32	9.02	10.77	5.72	7.77	9.29	7.47	11.62	13.89	6.82	10.43	12.47	6.19	9.20	10.99
	0.30	91.2	7.59	11.95	9.52	6.87	10.52	8.38	6.18	9.03	7.19	8.19	13.69	10.91	7.46	12.27	9.78	6.75	10.78	8.59
	0.40	150.0	7.86	13.08	7.81	7.10	11.50	6.87	6.37	9.84	5.88	8.50	15.03	8.98	7.74	13.45	8.04	7.00	11.80	7.05
1200	0.15	5.2	6.74	8.65	13.79	6.14	7.67	12.22	5.58	6.65	10.61	7.18	9.78	15.59	6.56	8.80	14.02	5.98	7.78	12.40
	0.20	8.6	7.71	10.34	12.35	7.00	9.14	10.92	6.34	7.89	9.43	8.25	11.75	14.04	7.53	10.55	12.61	6.85	9.31	11.12
	0.30	17.4	8.73	12.50	9.96	7.90	11.01	8.77	7.11	9.46	7.53	9.40	14.31	11.40	8.57	12.82	10.21	7.76	11.27	8.98
	0.55	49.6	9.53	15.21	6.61	8.60	13.35	5.80	7.70	11.40	4.95	10.34	17.52	7.61	9.41	15.68	6.81	8.49	13.73	5.97
1600	0.20	10.1	9.08	11.98	14.32	8.27	10.62	12.69	7.53	9.22	11.02	9.65	13.52	16.16	8.83	12.17	14.54	8.05	10.77	12.87
	0.30	20.3	10.65	14.99	11.94	9.66	13.24	10.55	8.74	11.42	9.10	11.41	17.06	13.59	10.41	15.31	12.20	9.46	13.50	10.75
	0.40	33.4	11.44	16.91	10.10	10.36	14.90	8.90	9.33	12.81	7.65	12.31	19.33	11.55	11.22	17.33	10.35	10.17	15.25	9.11
	0.55	58.0	12.03	18.82	8.18	10.87	16.56	7.19	9.76	14.18	6.16	12.99	21.60	9.39	11.83	19.35	8.41	10.71	16.99	7.38
2000	0.30	26.5	12.17	17.37	13.84	11.06	15.37	12.24	10.03	13.29	10.59	12.98	19.68	15.68	11.86	17.69	14.09	10.80	15.63	12.45
	0.40	43.5	13.34	20.00	11.95	12.09	17.65	10.54	10.92	15.20	9.08	14.31	22.79	13.61	13.05	20.45	12.22	11.85	18.02	10.76
	0.55	75.5	14.26	22.65	9.84	12.90	19.94	8.67	11.60	17.11	7.43	15.37	25.94	11.27	14.00	23.25	10.10	12.69	20.43	8.88
	0.70	114.7	14.73	24.51	8.37	13.31	21.55	7.36	11.94	18.44	6.30	15.93	28.15	9.61	14.50	25.20	8.60	13.12	22.12	7.55

HEATING Capacity

Unit Size	Water Flow (l/sec)	W.P.D (kPa)	Entering Air Condition DB=20.0°C										Entering Air Condition DB=22.0°C									
			Entering Water Temperature										Entering Water Temperature									
			40°C		50°C		60°C		70°C		80°C		40°C		50°C		60°C		70°C		80°C	
			TH (kW)	ΔWT (°C)	TH (kW)	ΔWT (°C)	TH (kW)	ΔWT (°C)	TH (kW)	ΔWT (°C)	TH (kW)	ΔWT (°C)	TH (kW)	ΔWT (°C)	TH (kW)	ΔWT (°C)	TH (kW)	ΔWT (°C)	TH (kW)	ΔWT (°C)	TH (kW)	ΔWT (°C)
600	0.10	10.9	5.55	13.28	8.33	19.92	11.11	26.56	9.63	46.04	11.56	55.25	5.00	11.95	7.78	18.59	10.56	25.24	9.25	44.20	11.17	53.41
	0.15	21.9	6.20	9.88	9.30	14.82	12.40	19.76	13.89	33.20	16.67	39.84	5.58	8.89	8.68	13.83	11.78	18.77	13.34	31.88	16.12	38.52
	0.20	36.0	6.52	7.79	9.78	11.69	13.04	15.58	15.50	24.70	18.60	29.64	5.86	7.01	9.13	10.91	12.39	14.80	14.88	23.71	17.98	28.65
	0.30	72.7	6.83	5.45	10.25	8.17	13.67	10.89	16.30	19.48	19.56	23.37	6.15	4.90	9.57	7.63	12.99	10.35	15.65	18.70	18.91	22.59
1000	0.10	13.6	6.89	16.47	10.34	24.70	13.78	32.94	17.23	41.17	20.68	49.40	6.20	14.82	9.65	23.06	13.09	31.29	16.54	39.52	19.99	47.76
	0.20	45.2	9.01	10.77	13.51	16.15	18.02	21.53	22.53	26.91	27.03	32.30	8.11	9.69	12.61	15.07	17.12	20.45	21.63	25.84	26.13	31.22
	0.30	91.2	9.77	7.78	14.66	11.67	19.54	15.57	24.43	19.46	29.32	23.35	8.79	7.00	13.68	10.90	18.57	14.79	23.45	18.68	28.34	22.57
	0.40	150.0	10.16	6.07	15.24	9.10	20.32	12.14	25.40	15.17	30.48	18.21	9.14	5.46	14.22	8.50	19.31	11.53	24.39	14.57	29.47	17.60
1200	0.15	5.2	9.07	14.45	13.60	21.68	18.14	28.90	22.68	36.13	27.21	43.35	8.16	13.01	12.70	20.23	17.23	27.46	21.77	34.68	26.31	41.91
	0.20	8.6	10.03	11.98	15.04	17.98	20.06	23.97	25.08	29.96	30.09	35.95	9.02	10.79	14.04	16.78	19.06	22.77	24.07	28.76	29.09	34.75
	0.30	17.4	11.01	8.77	16.52	13.16	22.02	17.54	27.53	21.92	33.03	26.31	9.91	7.89	15.41	12.28	20.92	16.66	26.43	21.05	31.93	25.43
	0.55	49.6	11.91	5.17	17.87	7.76	23.82	10.35	29.78	12.94	35.74	15.52	10.72	4.66	16.68	7.25	22.63	9.83	28.59	12.42	34.55	15.01
1600	0.20	10.1	11.93	14.26	17.90	21.39	23.87	28.52	29.84	35.65	35.81	42.78	10.74	12.83	16.71	19.96	22.68	27.09	28.65	34.22	34.62	41.35
	0.30	20.3	13.64	10.86	20.46	16.30	27.28	21.73	34.10	27.16	40.93	32.59	12.27	9.78	19.10	15.21	25.92	20.64	32.74	26.07	39.56	31.51
	0.40	33.4	14.53	8.68	21.79	13.02	29.06	17.36	36.32	21.70	43.59	26.03	13.07	7.81	20.34	12.15	27.60	16.49	34.87	20.83	42.13	25.17
	0.55	58.0	15.27	6.63	22.91	9.95	30.54	13.27	38.18	16.59	45.82	19.90	13.74	5.97	21.38	9.29	29.01	12.60	36.65	15.92	44.29	19.24
2000	0.30	26.5	16.10	12.82	24.15	19.23	32.20	25.64	40.25	32.06	48.30	38.47	14.49	11.54	22.54	17.95	30.59	24.36	38.64	30.77	46.69	37.18
	0.40	43.5	17.42	10.41	26.14	15.61	34.85	20.82	43.56	26.02	52.28	31.23	15.68	9.37	24.39	14.57	33.11	19.78	41.82	24.98	50.54	30.18
	0.55	75.5	18.51	8.04	27.77	12.06	37.02	16.08	46.28	20.10	55.54	24.12	16.66	7.24	25.91	11.26	35.17	15.28	44.43	19.30	53.69	23.32
	0.70	114.7	19.13	6.53	28.70	9.80	38.26	13.06	47.83	16.33	57.40	19.59	17.22	5.88	26.78	9.14	36.35	12.41	45.92	15.67	55.49	18.94

Note:To obtain accurate air volume and cooling/heating capacities,refer to pages 54-74

Ceiling Recessed Model-Standard Model 3-Row Cooling/Heating

SRC-2SW-3R 220V

Fan Speed : HIGH

Unit Size	TH/ SH	External Static Pressure (Pa) 0 CF	0 L/s	10 CF	10 L/s	20 CF	20 L/s	30 CF	30 L/s	40 CF	40 L/s	50 CF	50 L/s
300	TH	1.08	154	1.06	147	1.03	141	1.00	133	0.97	127	0.93	119
	SH	1.10		1.07		1.03		1.00		0.96		0.92	
400	TH	1.11	227	1.08	215	1.04	203	1.00	189	0.95	175	0.90	160
	SH	1.13		1.09		1.05		1.00		0.94		0.88	
600	TH	1.07	299	1.05	288	1.02	276	1.00	264	0.97	252	0.94	238
	SH	1.09		1.06		1.03		1.00		0.97		0.93	
800	TH	1.07	340	1.05	328	1.03	316	1.00	302	0.97	289	0.95	274
	SH	1.08		1.06		1.03		1.00		0.97		0.93	
1000	TH	1.07	476	1.05	458	1.02	441	1.00	422	0.97	403	0.94	382
	SH	1.08		1.06		1.03		1.00		0.97		0.93	
1200	TH	1.06	581	1.04	561	1.02	540	1.00	518	0.98	496	0.95	473
	SH	1.08		1.05		1.03		1.00		0.97		0.94	
1400	TH	1.07	651	1.05	628	1.02	603	1.00	578	0.97	551	0.94	524
	SH	1.08		1.06		1.03		1.00		0.97		0.94	

CF: Correction Factor H: Total Heat SH: Sensible Heat

◀ 53

54

Fan Speed : MEDIUM

Unit Size	TH/ SH	External Static Pressure (Pa) 0 CF	0 L/s	10 CF	10 L/s	20 CF	20 L/s	30 CF	30 L/s	40 CF	40 L/s	50 CF	50 L/s
300	TH	0.98	127	0.95	121	0.92	115	0.89	109	0.85	102	0.81	94
	SH	0.97		0.94		0.91		0.87		0.83		0.78	
400	TH	0.97	179	0.94	167	0.89	155	0.84	141	0.77	125	0.69	108
	SH	0.97		0.92		0.87		0.81		0.74		0.65	
600	TH	0.95	237	0.92	227	0.90	217	0.87	206	0.84	194	0.81	182
	SH	0.94		0.91		0.88		0.85		0.81		0.77	
800	TH	0.95	273	0.93	263	0.91	252	0.88	241	0.86	229	0.83	217
	SH	0.94		0.92		0.89		0.86		0.83		0.80	
1000	TH	0.95	381	0.93	366	0.91	351	0.88	334	0.85	317	0.82	300
	SH	0.94		0.92		0.89		0.86		0.83		0.79	
1200	TH	0.94	463	0.92	445	0.90	426	0.88	407	0.85	387	0.82	365
	SH	0.94		0.91		0.88		0.86		0.83		0.79	
1400	TH	0.97	541	0.95	521	0.93	500	0.90	479	0.88	456	0.85	432
	SH	0.97		0.94		0.92		0.89		0.86		0.83	

CF: Correction Factor H: Total Heat SH: Sensible Heat

Note: The above Rating Correction Factors due to External Static Pressure and Air Flow Rate are based on BASIC Model SRC.
When return-air plenum is used with the basic unit, these correction factors are subject to change. Derating factors will increase.
Consult SINKO distributor for specific derating factors.

Ceiling Recessed Model-Standard Model 4-Row Cooling/Heating

SRC-2SW-4R 220V

Fan Speed：HIGH

Unit Size	TH/ SH	External Static Pressure (Pa)											
		0		10		20		30		40		50	
		CF	L/s	CF	L/s	CF	L/s	CF	L/s	CF	L/s	CF	L/s
300	TH	1.09	143	1.06	137	1.03	131	1.00	124	0.96	118	0.92	111
	SH	1.10		1.07		1.04		1.00		0.96		0.91	
400	TH	1.12	207	1.09	196	1.05	185	1.00	172	0.95	160	0.89	146
	SH	1.15		1.11		1.06		1.00		0.94		0.87	
600	TH	1.08	278	1.05	268	1.03	257	1.00	245	0.97	234	0.94	222
	SH	1.10		1.07		1.03		1.00		0.96		0.93	
800	TH	1.07	321	1.05	310	1.03	298	1.00	285	0.97	273	0.94	259
	SH	1.09		1.06		1.03		1.00		0.97		0.93	
1000	TH	1.07	444	1.05	428	1.03	411	1.00	394	0.97	376	0.94	357
	SH	1.09		1.06		1.03		1.00		0.97		0.93	
1200	TH	1.07	569	1.05	549	1.02	529	1.00	508	0.97	486	0.95	463
	SH	1.08		1.06		1.03		1.00		0.97		0.94	
1400	TH	1.07	613	1.05	591	1.03	568	1.00	544	0.97	520	0.94	493
	SH	1.09		1.06		1.03		1.00		0.97		0.93	

CF：Correction Factor H：Total Heat SH：Sensible Heat

Fan Speed：MEDIUM

Unit Size	TH/ SH	External Static Pressure (Pa)											
		0		10		20		30		40		50	
		CF	L/s	CF	L/s	CF	L/s	CF	L/s	CF	L/s	CF	L/s
300	TH	0.99	120	0.96	114	0.92	109	0.89	103	0.85	96	0.81	89
	SH	0.98		0.95		0.91		0.87		0.82		0.78	
400	TH	0.98	165	0.93	154	0.88	142	0.83	129	0.76	115	0.67	99
	SH	0.98		0.92		0.87		0.80		0.72		0.63	
600	TH	0.94	221	0.92	211	0.89	202	0.86	191	0.83	181	0.79	169
	SH	0.93		0.91		0.87		0.84		0.80		0.76	
800	TH	0.96	265	0.94	255	0.92	245	0.89	234	0.86	222	0.83	210
	SH	0.96		0.93		0.90		0.87		0.84		0.80	
1000	TH	0.96	364	0.94	349	0.91	335	0.88	319	0.86	303	0.82	286
	SH	0.95		0.93		0.90		0.87		0.83		0.80	
1200	TH	0.95	454	0.92	437	0.90	419	0.87	400	0.85	380	0.82	359
	SH	0.94		0.91		0.88		0.85		0.82		0.78	
1400	TH	0.97	510	0.95	491	0.93	472	0.90	451	0.87	430	0.85	408
	SH	0.97		0.94		0.91		0.88		0.85		0.82	

CF：Correction Factor H：Total Heat SH：Sensible Heat

Note: The above Rating Correction Factors due to External Static Pressure and Air Flow Rate are based on BASIC Model SRC.
When return-air plenum is used with the basic unit, these correction factors are subject to change. Derating factors will increase.
Consult SINKO distributor for specific derating factors.

Ceiling Recessed Model-Standard Model 2-Row Cooling, 1-Row Heating

SRC-2SW-DC1 220V

Fan Speed : HIGH

Unit Size	TH/ SH	External Static Pressure (Pa)											
		0		10		20		30		40		50	
		CF	L/s	CF	L/s	CF	L/s	CF	L/s	CF	L/s	CF	L/s
300	TH	1.07	154	1.05	147	1.02	141	1.00	133	0.97	127	0.94	119
	SH	1.09		1.06		1.03		1.00		0.97		0.93	
400	TH	1.10	227	1.07	215	1.04	203	1.00	189	0.96	175	0.91	160
	SH	1.12		1.08		1.05		1.00		0.95		0.89	
600	TH	1.06	299	1.04	288	1.02	276	1.00	264	0.97	252	0.95	238
	SH	1.07		1.05		1.02		1.00		0.97		0.94	
800	TH	1.06	340	1.04	328	1.02	316	1.00	302	0.98	289	0.95	274
	SH	1.07		1.05		1.02		1.00		0.97		0.94	
1000	TH	1.06	476	1.04	458	1.02	441	1.00	422	0.98	403	0.95	382
	SH	1.07		1.05		1.03		1.00		0.97		0.94	
1200	TH	1.06	581	1.04	561	1.02	540	1.00	518	0.98	496	0.95	473
	SH	1.07		1.05		1.03		1.00		0.97		0.94	
1400	TH	1.06	651	1.04	628	1.02	603	1.00	578	0.98	551	0.95	524
	SH	1.07		1.05		1.03		1.00		0.97		0.94	

CF: Correction Factor H: Total Heat SH: Sensible Heat

◀55·56

Fan Speed : MEDIUM

Unit Size	TH/ SH	External Static Pressure (Pa)											
		0		10		20		30		40		50	
		CF	L/s	CF	L/s	CF	L/s	CF	L/s	CF	L/s	CF	L/s
300	TH	0.98	127	0.95	121	0.93	115	0.90	109	0.87	102	0.83	94
	SH	0.97		0.94		0.91		0.88		0.85		0.81	
400	TH	0.97	179	0.94	167	0.90	155	0.85	141	0.79	125	0.73	108
	SH	0.97		0.93		0.88		0.83		0.76		0.68	
600	TH	0.95	237	0.93	227	0.91	217	0.88	206	0.86	194	0.83	182
	SH	0.94		0.91		0.89		0.86		0.83		0.79	
800	TH	0.95	273	0.94	263	0.91	252	0.89	241	0.87	229	0.85	217
	SH	0.94		0.92		0.90		0.87		0.85		0.82	
1000	TH	0.95	381	0.93	366	0.91	351	0.89	334	0.86	317	0.84	300
	SH	0.94		0.92		0.89		0.87		0.84		0.81	
1200	TH	0.95	463	0.93	445	0.91	426	0.88	407	0.86	387	0.83	365
	SH	0.94		0.91		0.89		0.86		0.84		0.81	
1400	TH	0.97	541	0.95	521	0.93	500	0.91	479	0.89	456	0.86	432
	SH	0.97		0.94		0.92		0.90		0.87		0.84	

CF: Correction Factor H: Total Heat SH: Sensible Heat

Note: The above Rating Correction Factors due to External Static Pressure and Air Flow Rate are based on BASIC Model SRC.
When return-air plenum is used with the basic unit, these correction factors are subject to change. Derating factors will increase.
Consult SINKO distributor for specific derating factors.

Ceiling Recessed Model-Standard Model 3-Row Cooling, 1-Row Heating

SRC-2SW-DC2 220V

Fan Speed：HIGH

Unit Size	TH/ SH	External Static Pressure (Pa)											
		0		10		20		30		40		50	
		CF	L/s	CF	L/s	CF	L/s	CF	L/s	CF	L/s	CF	L/s
300	TH	1.08	143	1.06	137	1.03	131	1.00	124	0.97	118	0.94	111
	SH	1.09		1.06		1.03		1.00		0.96		0.92	
400	TH	1.11	207	1.07	196	1.04	185	1.00	172	0.95	160	0.90	146
	SH	1.13		1.09		1.05		1.00		0.95		0.88	
600	TH	1.07	278	1.05	268	1.02	257	1.00	245	0.97	234	0.94	222
	SH	1.08		1.05		1.03		1.00		0.97		0.93	
800	TH	1.06	321	1.04	310	1.02	298	1.00	285	0.98	273	0.95	259
	SH	1.08		1.05		1.03		1.00		0.97		0.94	
1000	TH	1.07	444	1.04	428	1.02	411	1.00	394	0.97	376	0.95	357
	SH	1.08		1.05		1.03		1.00		0.97		0.94	
1200	TH	1.06	569	1.04	549	1.02	529	1.00	508	0.98	486	0.95	463
	SH	1.07		1.05		1.03		1.00		0.97		0.94	
1400	TH	1.07	613	1.05	591	1.02	568	1.00	544	0.97	520	0.95	493
	SH	1.08		1.05		1.03		1.00		0.97		0.94	

CF：Correction Factor H：Total Heat SH：Sensible Heat

Fan Speed：MEDIUM

Unit Size	TH/ SH	External Static Pressure (Pa)											
		0		10		20		30		40		50	
		CF	L/s	CF	L/s	CF	L/s	CF	L/s	CF	L/s	CF	L/s
300	TH	0.99	120	0.96	114	0.93	109	0.90	103	0.87	96	0.83	89
	SH	0.98		0.95		0.92		0.88		0.84		0.80	
400	TH	0.98	165	0.94	154	0.89	142	0.84	129	0.78	115	0.70	99
	SH	0.97		0.92		0.87		0.82		0.74		0.66	
600	TH	0.95	221	0.92	211	0.90	202	0.87	191	0.85	181	0.81	169
	SH	0.94		0.91		0.88		0.85		0.82		0.78	
800	TH	0.96	265	0.95	255	0.92	245	0.90	234	0.88	222	0.85	210
	SH	0.96		0.94		0.91		0.88		0.85		0.82	
1000	TH	0.96	364	0.94	349	0.92	335	0.89	319	0.87	303	0.84	286
	SH	0.96		0.93		0.90		0.88		0.84		0.81	
1200	TH	0.95	454	0.93	437	0.90	419	0.88	400	0.85	380	0.83	359
	SH	0.94		0.91		0.89		0.86		0.83		0.80	
1400	TH	0.97	510	0.95	491	0.93	472	0.91	451	0.88	430	0.86	408
	SH	0.97		0.94		0.92		0.89		0.86		0.83	

CF：Correction Factor H：Total Heat SH：Sensible Heat

Note: The above Rating Correction Factors due to External Static Pressure and Air Flow Rate are based on BASIC Model SRC.
When return-air plenum is used with the basic unit, these correction factors are subject to change. Derating factors will increase.
Consult SINKO distributor for specific derating factors.

Ceiling Recessed Model-Standard Model 4-Row, High Temperature Rise

SRC-2SW-HT 220V

Fan Speed : HIGH

Unit Size	TH/ SH	External Static Pressure (Pa) 0 CF	0 L/s	10 CF	10 L/s	20 CF	20 L/s	30 CF	30 L/s	40 CF	40 L/s	50 CF	50 L/s
300	TH	1.09	143	1.06	137	1.03	131	1.00	124	0.96	118	0.92	111
	SH	1.11		1.08		1.04		1.00		0.95		0.91	
400	TH	1.13	207	1.09	196	1.05	185	1.00	172	0.95	160	0.89	146
	SH	1.15		1.11		1.06		1.00		0.94		0.86	
600	TH	1.08	278	1.06	268	1.03	257	1.00	245	0.97	234	0.93	222
	SH	1.10		1.07		1.04		1.00		0.96		0.92	
800	TH	1.08	321	1.05	310	1.03	298	1.00	285	0.97	273	0.94	259
	SH	1.09		1.06		1.03		1.00		0.97		0.93	
1000	TH	1.08	444	1.05	428	1.03	411	1.00	394	0.97	376	0.94	357
	SH	1.09		1.06		1.03		1.00		0.96		0.93	
1200	TH	1.07	569	1.05	549	1.03	529	1.00	508	0.97	486	0.94	463
	SH	1.09		1.06		1.03		1.00		0.97		0.93	
1400	TH	1.08	613	1.05	591	1.03	568	1.00	544	0.97	520	0.94	493
	SH	1.09		1.06		1.03		1.00		0.97		0.93	

CF: Correction Factor H: Total Heat SH: Sensible Heat

◀57·58

Fan Speed : MEDIUM

Unit Size	TH/ SH	External Static Pressure (Pa) 0 CF	0 L/s	10 CF	10 L/s	20 CF	20 L/s	30 CF	30 L/s	40 CF	40 L/s	50 CF	50 L/s
300	TH	0.98	120	0.95	114	0.92	109	0.88	103	0.85	96	0.80	89
	SH	0.98		0.95		0.91		0.87		0.82		0.77	
400	TH	0.98	165	0.93	154	0.88	142	0.82	129	0.75	115	0.67	99
	SH	0.97		0.92		0.86		0.79		0.71		0.62	
600	TH	0.94	221	0.92	211	0.89	202	0.86	191	0.83	181	0.79	169
	SH	0.93		0.90		0.87		0.83		0.80		0.75	
800	TH	0.96	265	0.94	255	0.92	245	0.89	234	0.86	222	0.83	210
	SH	0.96		0.93		0.90		0.87		0.83		0.80	
1000	TH	0.96	364	0.94	349	0.91	335	0.88	319	0.85	303	0.82	286
	SH	0.95		0.93		0.89		0.86		0.83		0.79	
1200	TH	0.95	454	0.92	437	0.90	419	0.87	400	0.84	380	0.81	359
	SH	0.93		0.91		0.88		0.85		0.81		0.78	
1400	TH	0.97	510	0.95	491	0.93	472	0.90	451	0.87	430	0.84	408
	SH	0.97		0.94		0.91		0.88		0.85		0.81	

CF: Correction Factor H: Total Heat SH: Sensible Heat

Note: The above Rating Correction Factors due to External Static Pressure and Air Flow Rate are based on BASIC Model SRC.
When return-air plenum is used with the basic unit, these correction factors are subject to change. Derating factors will increase.
Consult SINKO distributor for specific derating factors.

Ceiling Recessed Model-High Static Model 3-Row Cooling/Heating

SRC-2HW-3R 220V

Fan Speed：HIGH

Unit Size	TH/ SH	External Static Pressure (Pa)											
		0		20		40		60		80		100	
		CF	L/s	CF	L/s	CF	L/s	CF	L/s	CF	L/s	CF	L/s
300	TH	1.12	191	1.08	177	1.03	162	0.97	146	0.89	127	0.79	106
	SH	1.15		1.10		1.04		0.96		0.87		0.76	
400	TH	1.14	288	1.09	265	1.03	240	0.96	212	0.87	180	0.74	141
	SH	1.17		1.11		1.04		0.96		0.85		0.70	
600	TH	1.12	348	1.08	323	1.03	297	0.97	268	0.90	236	0.80	198
	SH	1.15		1.09		1.03		0.96		0.88		0.77	
800	TH	1.11	412	1.07	385	1.03	356	0.97	324	0.91	289	0.83	249
	SH	1.13		1.09		1.03		0.97		0.89		0.80	
1000	TH	1.12	561	1.07	523	1.03	482	0.97	437	0.90	387	0.82	329
	SH	1.14		1.09		1.03		0.97		0.89		0.79	
1200	TH	1.11	674	1.07	628	1.03	579	0.97	524	0.90	464	0.82	394
	SH	1.14		1.09		1.03		0.97		0.89		0.79	
1400	TH	1.11	792	1.07	740	1.03	685	0.97	624	0.91	557	0.84	481
	SH	1.13		1.08		1.03		0.97		0.90		0.81	

CF：Correction Factor H：Total Heat SH：Sensible Heat

Fan Speed：MEDIUM

Unit Size	TH/ SH	External Static Pressure (Pa)											
		0		20		40		60		80		100	
		CF	L/s	CF	L/s	CF	L/s	CF	L/s	CF	L/s	CF	L/s
300	TH	1.03	160	0.99	148	0.93	135	0.87	120	0.80	104	0.69	84
	SH	1.04		0.98		0.92		0.85		0.76		0.65	
400	TH	0.99	218	0.94	198	0.87	175	0.79	149	0.67	117	0.47	73
	SH	0.99		0.92		0.85		0.75		0.62		0.41	
600	TH	1.06	309	1.01	286	0.96	262	0.90	234	0.83	204	0.73	168
	SH	1.07		1.01		0.95		0.88		0.80		0.68	
800	TH	0.98	325	0.95	304	0.90	280	0.85	255	0.79	226	0.72	193
	SH	0.98		0.94		0.89		0.83		0.76		0.67	
1000	TH	1.03	481	0.99	447	0.95	411	0.89	371	0.82	326	0.74	274
	SH	1.04		0.99		0.93		0.87		0.79		0.70	
1200	TH	1.05	601	1.01	558	0.96	511	0.91	460	0.84	402	0.74	334
	SH	1.06		1.01		0.96		0.89		0.81		0.70	
1400	TH	1.01	657	0.97	613	0.93	565	0.88	514	0.82	456	0.75	390
	SH	1.01		0.97		0.92		0.86		0.79		0.70	

CF：Correction Factor H：Total Heat SH：Sensible Heat

Note: The above Rating Correction Factors due to External Static Pressure and Air Flow Rate are based on BASIC Model SRC.
When return-air plenum is used with the basic unit, these correction factors are subject to change. Derating factors will increase.
Consult SINKO distributor for specific derating factors.

Ceiling Recessed Model-Standard Model 4-Row Cooling/Heating

SRC-2HW-4R 220V

Fan Speed : HIGH

Unit Size	TH/ SH	External Static Pressure (Pa) 0		20		40		60		80		100	
		CF	L/s	CF	L/s	CF	L/s	CF	L/s	CF	L/s	CF	L/s
300	TH	1.13	176	1.09	164	1.03	150	0.97	135	0.89	118	0.78	98
	SH	1.16		1.10		1.04		0.96		0.87		0.75	
400	TH	1.16	263	1.10	242	1.04	219	0.96	194	0.86	164	0.72	128
	SH	1.19		1.12		1.04		0.95		0.84		0.68	
600	TH	1.13	319	1.08	297	1.03	273	0.97	246	0.89	217	0.79	182
	SH	1.16		1.10		1.04		0.96		0.87		0.75	
800	TH	1.12	403	1.08	377	1.03	348	0.97	317	0.90	283	0.82	244
	SH	1.14		1.09		1.03		0.96		0.89		0.79	
1000	TH	1.12	515	1.08	480	1.03	443	0.97	401	0.90	355	0.80	302
	SH	1.15		1.10		1.03		0.96		0.88		0.77	
1200	TH	1.12	656	1.08	612	1.03	563	0.97	510	0.90	451	0.81	383
	SH	1.15		1.09		1.03		0.96		0.88		0.77	
1400	TH	1.11	737	1.07	689	1.03	637	0.97	581	0.91	518	0.82	447
	SH	1.14		1.09		1.03		0.97		0.89		0.79	

CF: Correction Factor H: Total Heat SH: Sensible Heat

◀59·60

Fan Speed : MEDIUM

Unit Size	TH/ SH	External Static Pressure (Pa) 0		20		40		60		80		100	
		CF	L/s	CF	L/s	CF	L/s	CF	L/s	CF	L/s	CF	L/s
300	TH	1.05	151	1.00	139	0.94	127	0.88	113	0.79	98	0.68	79
	SH	1.05		1.00		0.93		0.86		0.76		0.64	
400	TH	0.99	198	0.93	179	0.86	159	0.77	135	0.64	107	0.43	67
	SH	0.99		0.92		0.84		0.73		0.60		0.37	
600	TH	1.06	283	1.01	263	0.96	240	0.89	215	0.81	187	0.71	154
	SH	1.07		1.02		0.95		0.88		0.78		0.66	
800	TH	1.00	324	0.96	303	0.91	279	0.86	254	0.79	225	0.71	193
	SH	1.00		0.95		0.89		0.83		0.76		0.67	
1000	TH	1.05	453	1.01	421	0.96	387	0.90	349	0.82	307	0.73	258
	SH	1.06		1.01		0.95		0.88		0.79		0.69	
1200	TH	1.06	586	1.01	544	0.96	498	0.90	448	0.83	391	0.73	325
	SH	1.07		1.02		0.95		0.88		0.80		0.69	
1400	TH	1.02	615	0.98	574	0.93	529	0.88	481	0.81	427	0.73	366
	SH	1.02		0.97		0.92		0.86		0.78		0.69	

CF: Correction Factor H: Total Heat SH: Sensible Heat

Note: The above Rating Correction Factors due to External Static Pressure and Air Flow Rate are based on BASIC Model SRC.
When return-air plenum is used with the basic unit, these correction factors are subject to change. Derating factors will increase.
Consult SINKO distributor for specific derating factors.

Ceiling Recessed Model-High Static Model 2-Row Cooling, 1-Row Heating

SRC-2HW-DC1 220V

Fan Speed：HIGH

Unit Size	TH/ SH	External Static Pressure (Pa)											
		0		20		40		60		80		100	
		CF	L/s	CF	L/s	CF	L/s	CF	L/s	CF	L/s	CF	L/s
300	TH	1.11	191	1.07	177	1.02	162	0.97	146	0.91	127	0.82	106
	SH	1.14		1.09		1.03		0.97		0.89		0.79	
400	TH	1.13	288	1.08	265	1.03	240	0.97	212	0.88	180	0.77	141
	SH	1.16		1.10		1.04		0.96		0.86		0.73	
600	TH	1.10	348	1.07	323	1.02	297	0.98	268	0.91	236	0.83	198
	SH	1.13		1.08		1.03		0.97		0.89		0.80	
800	TH	1.10	412	1.06	385	1.02	356	0.98	324	0.92	289	0.85	249
	SH	1.11		1.07		1.03		0.97		0.91		0.83	
1000	TH	1.10	561	1.07	523	1.02	482	0.97	437	0.91	387	0.84	329
	SH	1.13		1.08		1.03		0.97		0.90		0.81	
1200	TH	1.10	674	1.07	628	1.02	579	0.97	524	0.91	464	0.84	394
	SH	1.13		1.08		1.03		0.97		0.90		0.81	
1400	TH	1.10	792	1.06	740	1.02	685	0.98	624	0.92	557	0.85	481
	SH	1.12		1.07		1.03		0.97		0.91		0.82	

CF：Correction Factor H：Total Heat SH：Sensible Heat

Fan Speed：MEDIUM

Unit Size	TH/ SH	External Static Pressure (Pa)											
		0		20		40		60		80		100	
		CF	L/s	CF	L/s	CF	L/s	CF	L/s	CF	L/s	CF	L/s
300	TH	1.02	160	0.98	148	0.94	135	0.88	120	0.81	104	0.72	84
	SH	1.03		0.98		0.93		0.86		0.79		0.68	
400	TH	0.99	218	0.94	198	0.88	175	0.80	149	0.70	117	0.51	73
	SH	0.98		0.93		0.86		0.77		0.65		0.46	
600	TH	1.05	309	1.01	286	0.97	262	0.91	234	0.85	204	0.76	168
	SH	1.05		1.01		0.96		0.89		0.82		0.72	
800	TH	0.98	325	0.95	304	0.91	280	0.87	255	0.82	226	0.75	193
	SH	0.98		0.94		0.89		0.84		0.78		0.71	
1000	TH	1.02	481	0.99	447	0.95	411	0.90	371	0.84	326	0.76	274
	SH	1.03		0.99		0.94		0.88		0.81		0.72	
1200	TH	1.05	601	1.01	558	0.96	511	0.91	460	0.85	402	0.76	334
	SH	1.06		1.01		0.96		0.90		0.82		0.72	
1400	TH	1.01	657	0.97	613	0.93	565	0.89	514	0.83	456	0.77	390
	SH	1.01		0.96		0.92		0.87		0.80		0.73	

CF：Correction Factor H：Total Heat SH：Sensible Heat

Note: The above Rating Correction Factors due to External Static Pressure and Air Flow Rate are based on BASIC Model SRC.
When return-air plenum is used with the basic unit, these correction factors are subject to change. Derating factors will increase.
Consult SINKO distributor for specific derating factors.

Ceiling Recessed Model-High Static Model 3-Row Cooling, 1-Row Heating

SRC-2HW-DC2 220V

Fan Speed : HIGH

Unit Size	TH/ SH	External Static Pressure (Pa)											
		0		20		40		60		80		100	
		CF	L/s	CF	L/s	CF	L/s	CF	L/s	CF	L/s	CF	L/s
300	TH	1.11	176	1.07	164	1.02	150	0.97	135	0.90	118	0.80	98
	SH	1.15		1.09		1.03		0.97		0.88		0.78	
400	TH	1.14	263	1.09	242	1.03	219	0.96	194	0.87	164	0.75	128
	SH	1.17		1.11		1.04		0.96		0.85		0.71	
600	TH	1.11	319	1.07	297	1.03	273	0.97	246	0.91	217	0.82	182
	SH	1.14		1.09		1.03		0.97		0.89		0.79	
800	TH	1.10	403	1.06	377	1.02	348	0.98	317	0.92	283	0.85	244
	SH	1.12		1.08		1.03		0.97		0.90		0.82	
1000	TH	1.11	515	1.07	480	1.03	443	0.97	401	0.91	355	0.82	302
	SH	1.13		1.08		1.03		0.97		0.89		0.79	
1200	TH	1.11	656	1.07	612	1.03	563	0.97	510	0.91	451	0.82	383
	SH	1.13		1.09		1.03		0.97		0.89		0.79	
1400	TH	1.10	737	1.06	689	1.02	637	0.97	581	0.92	518	0.84	447
	SH	1.12		1.08		1.03		0.97		0.90		0.81	

CF: Correction Factor H: Total Heat SH: Sensible Heat

◀61·62

Fan Speed : MEDIUM

Unit Size	TH/ SH	External Static Pressure (Pa)											
		0		20		40		60		80		100	
		CF	L/s	CF	L/s	CF	L/s	CF	L/s	CF	L/s	CF	L/s
300	TH	1.03	151	0.99	139	0.94	127	0.88	113	0.81	98	0.71	79
	SH	1.04		0.99		0.94		0.87		0.78		0.67	
400	TH	0.98	198	0.93	179	0.87	159	0.79	135	0.67	107	0.48	67
	SH	0.98		0.92		0.85		0.75		0.63		0.42	
600	TH	1.05	283	1.01	263	0.96	240	0.91	215	0.84	187	0.74	154
	SH	1.06		1.01		0.96		0.89		0.81		0.70	
800	TH	0.99	324	0.96	303	0.92	279	0.87	254	0.82	225	0.74	193
	SH	0.99		0.95		0.90		0.85		0.78		0.70	
1000	TH	1.04	453	1.00	421	0.96	387	0.90	349	0.84	307	0.75	258
	SH	1.05		1.00		0.95		0.89		0.81		0.71	
1200	TH	1.05	586	1.01	544	0.96	498	0.91	448	0.84	391	0.75	325
	SH	1.06		1.01		0.96		0.89		0.81		0.71	
1400	TH	1.01	615	0.98	574	0.93	529	0.89	481	0.83	427	0.75	366
	SH	1.01		0.97		0.92		0.86		0.80		0.71	

CF: Correction Factor H: Total Heat SH: Sensible Heat

Note: The above Rating Correction Factors due to External Static Pressure and Air Flow Rate are based on BASIC Model SRC.
When return-air plenum is used with the basic unit, these correction factors are subject to change. Derating factors will increase.
Consult SINKO distributor for specific derating factors.

Ceiling Recessed Model-High Static Model 4-Row, High Temperature Rise

SRC-2HW-HT 220V

Fan Speed：HIGH

Unit Size	TH/ SH	External Static Pressure (Pa)											
		0		20		40		60		80		100	
		CF	L/s	CF	L/s	CF	L/s	CF	L/s	CF	L/s	CF	L/s
300	TH	1.15	176	1.09	164	1.03	150	0.96	135	0.88	118	0.77	98
	SH	1.18		1.11		1.04		0.96		0.86		0.73	
400	TH	1.16	263	1.11	242	1.04	219	0.96	194	0.85	164	0.71	128
	SH	1.20		1.13		1.05		0.95		0.83		0.66	
600	TH	1.14	319	1.09	297	1.03	273	0.97	246	0.88	217	0.78	182
	SH	1.17		1.11		1.04		0.96		0.86		0.74	
800	TH	1.12	403	1.08	377	1.03	348	0.97	317	0.90	283	0.81	244
	SH	1.15		1.09		1.03		0.96		0.88		0.78	
1000	TH	1.13	515	1.08	480	1.03	443	0.97	401	0.89	355	0.79	302
	SH	1.16		1.10		1.04		0.96		0.87		0.76	
1200	TH	1.13	656	1.08	612	1.03	563	0.97	510	0.89	451	0.80	383
	SH	1.16		1.10		1.03		0.96		0.87		0.76	
1400	TH	1.12	737	1.08	689	1.03	637	0.97	581	0.90	518	0.82	447
	SH	1.15		1.09		1.03		0.96		0.88		0.78	

CF：Correction Factor H：Total Heat SH：Sensible Heat

Fan Speed：MEDIUM

Unit Size	TH/ SH	External Static Pressure (Pa)											
		0		20		40		60		80		100	
		CF	L/s	CF	L/s	CF	L/s	CF	L/s	CF	L/s	CF	L/s
300	TH	1.05	151	1.00	139	0.94	127	0.87	113	0.78	98	0.67	79
	SH	1.06		1.00		0.93		0.85		0.75		0.62	
400	TH	0.99	198	0.93	179	0.86	159	0.76	135	0.64	107	0.42	67
	SH	0.99		0.92		0.83		0.73		0.58		0.36	
600	TH	1.06	283	1.02	263	0.96	240	0.89	215	0.81	187	0.70	154
	SH	1.08		1.02		0.95		0.87		0.77		0.65	
800	TH	1.00	324	0.96	303	0.91	279	0.85	254	0.79	225	0.71	193
	SH	1.00		0.95		0.89		0.83		0.75		0.66	
1000	TH	1.05	453	1.01	421	0.95	387	0.89	349	0.82	307	0.72	258
	SH	1.07		1.01		0.95		0.87		0.78		0.68	
1200	TH	1.06	586	1.02	544	0.96	498	0.90	448	0.82	391	0.72	325
	SH	1.08		1.02		0.95		0.88		0.79		0.67	
1400	TH	1.02	615	0.98	574	0.93	529	0.87	481	0.81	427	0.72	366
	SH	1.02		0.97		0.92		0.85		0.77		0.68	

CF：Correction Factor H：Total Heat SH：Sensible Heat

Note: The above Rating Correction Factors due to External Static Pressure and Air Flow Rate are based on BASIC Model SRC.
When return-air plenum is used with the basic unit, these correction factors are subject to change. Derating factors will increase.
Consult SINKO distributor for specific derating factors.

Ceiling Recessed Model-Large Air Volume Model 3-Row Cooling/Heating

SRC-2SH-3R 220V

Fan Speed：HIGH

Unit Size	TH/ SH	External Static Pressure (Pa) 0 CF	0 L/s	20 CF	20 L/s	40 CF	40 L/s	60 CF	60 L/s	80 CF	80 L/s	100 CF	100 L/s
300	TH	1.13	200	1.08	185	1.03	170	0.97	153	0.90	133	0.80	110
	SH	1.15		1.09		1.03		0.96		0.87		0.76	
400	TH	1.13	352	1.09	325	1.03	295	0.96	262	0.88	223	0.75	177
	SH	1.16		1.11		1.04		0.95		0.86		0.71	
600	TH	1.14	366	1.09	338	1.03	308	0.97	274	0.88	236	0.76	190
	SH	1.16		1.11		1.04		0.96		0.86		0.73	
800	TH	1.10	468	1.07	438	1.02	406	0.97	372	0.92	334	0.85	291
	SH	1.12		1.08		1.03		0.97		0.90		0.82	
1000	TH	1.11	667	1.07	622	1.03	574	0.97	521	0.91	462	0.83	395
	SH	1.13		1.08		1.03		0.97		0.89		0.80	
1200	TH	1.13	704	1.08	651	1.03	592	0.97	527	0.88	452	0.77	363
	SH	1.16		1.10		1.04		0.96		0.86		0.73	
1400	TH	1.10	889	1.06	832	1.02	771	0.98	705	0.92	632	0.85	550
	SH	1.12		1.08		1.03		0.97		0.90		0.82	

CF：Correction Factor H：Total Heat SH：Sensible Heat

◀ 63
64

Fan Speed：MEDIUM

Unit Size	TH/ SH	External Static Pressure (Pa) 0 CF	0 L/s	20 CF	20 L/s	40 CF	40 L/s	60 CF	60 L/s	80 CF	80 L/s	100 CF	100 L/s
300	TH	1.06	178	1.02	164	0.97	149	0.90	133	0.82	115	0.72	93
	SH	1.07		1.01		0.96		0.88		0.79		0.67	
400	TH	1.09	325	1.04	299	0.99	270	0.92	238	0.83	200	0.69	153
	SH	1.11		1.05		0.98		0.90		0.80		0.65	
600	TH	1.09	339	1.04	312	0.99	283	0.92	250	0.83	213	0.70	167
	SH	1.11		1.05		0.98		0.90		0.80		0.66	
800	TH	1.07	436	1.03	408	0.99	378	0.94	345	0.88	309	0.81	268
	SH	1.08		1.03		0.98		0.93		0.86		0.77	
1000	TH	1.07	615	1.03	573	0.98	527	0.93	477	0.87	422	0.78	357
	SH	1.08		1.03		0.98		0.92		0.84		0.75	
1200	TH	1.09	654	1.04	601	0.98	542	0.91	477	0.82	401	0.69	306
	SH	1.11		1.05		0.98		0.90		0.79		0.64	
1400	TH	1.07	839	1.04	785	0.99	726	0.95	663	0.89	593	0.82	513
	SH	1.09		1.04		0.99		0.94		0.87		0.78	

CF：Correction Factor H：Total Heat SH：Sensible Heat

Note: The above Rating Correction Factors due to External Static Pressure and Air Flow Rate are based on BASIC Model SRC.
When return-air plenum is used with the basic unit, these correction factors are subject to change. Derating factors will increase.
Consult SINKO distributor for specific derating factors.

Ceiling Recessed Model-Large Air Volume Model 4-Row Cooling/Heating

SRC-2SH-4R 220V

Fan Speed：HIGH

Unit Size	TH/ SH	External Static Pressure (Pa)											
		0		20		40		60		80		100	
		CF	L/s	CF	L/s	CF	L/s	CF	L/s	CF	L/s	CF	L/s
300	TH	1.13	184	1.08	171	1.03	156	0.97	141	0.89	123	0.78	102
	SH	1.16		1.10		1.04		0.96		0.87		0.74	
400	TH	1.15	312	1.10	287	1.03	261	0.96	231	0.87	197	0.73	156
	SH	1.18		1.11		1.04		0.96		0.84		0.69	
600	TH	1.15	334	1.09	308	1.03	281	0.96	250	0.87	215	0.74	173
	SH	1.18		1.12		1.04		0.96		0.85		0.70	
800	TH	1.11	450	1.07	422	1.03	391	0.97	358	0.91	321	0.83	280
	SH	1.13		1.08		1.03		0.97		0.90		0.81	
1000	TH	1.12	587	1.08	547	1.03	505	0.97	458	0.90	407	0.81	347
	SH	1.14		1.09		1.03		0.96		0.88		0.78	
1200	TH	1.14	680	1.09	628	1.03	572	0.96	509	0.87	437	0.75	350
	SH	1.17		1.11		1.04		0.96		0.85		0.71	
1400	TH	1.11	803	1.07	751	1.02	696	0.97	637	0.91	571	0.83	496
	SH	1.13		1.08		1.03		0.97		0.89		0.80	

CF：Correction Factor H：Total Heat SH：Sensible Heat

Fan Speed：MEDIUM

Unit Size	TH/ SH	External Static Pressure (Pa)											
		0		20		40		60		80		100	
		CF	L/s	CF	L/s	CF	L/s	CF	L/s	CF	L/s	CF	L/s
300	TH	1.07	166	1.03	153	0.97	140	0.90	124	0.81	107	0.70	86
	SH	1.09		1.03		0.96		0.89		0.79		0.66	
400	TH	1.10	289	1.05	265	0.99	240	0.91	211	0.81	177	0.67	136
	SH	1.13		1.06		0.99		0.90		0.78		0.62	
600	TH	1.10	309	1.05	285	0.99	258	0.91	228	0.82	194	0.68	152
	SH	1.12		1.06		0.99		0.90		0.79		0.63	
800	TH	1.08	426	1.04	399	0.99	369	0.94	337	0.88	302	0.80	261
	SH	1.10		1.05		0.99		0.93		0.86		0.77	
1000	TH	1.09	553	1.04	515	0.99	474	0.94	429	0.86	379	0.77	321
	SH	1.10		1.05		0.99		0.92		0.84		0.74	
1200	TH	1.10	635	1.05	583	0.99	526	0.91	463	0.81	389	0.67	297
	SH	1.12		1.06		0.98		0.90		0.78		0.62	
1400	TH	1.09	769	1.05	719	1.00	666	0.95	608	0.89	543	0.81	470
	SH	1.10		1.06		1.00		0.94		0.87		0.77	

CF：Correction Factor H：Total Heat SH：Sensible Heat

Note: The above Rating Correction Factors due to External Static Pressure and Air Flow Rate are based on BASIC Model SRC.
When return-air plenum is used with the basic unit, these correction factors are subject to change. Derating factors will increase.
Consult SINKO distributor for specific derating factors.

Ceiling Recessed Model-Large Air Volume Model 2-Row Cooling, 1-Row Heating

SRC-2SH-DC1 220V

Fan Speed：HIGH

Unit Size	TH/ SH	External Static Pressure (Pa)											
		0		20		40		60		80		100	
		CF	L/s	CF	L/s	CF	L/s	CF	L/s	CF	L/s	CF	L/s
300	TH	1.11	200	1.07	185	1.02	170	0.97	153	0.90	133	0.82	110
	SH	1.13		1.08		1.03		0.96		0.89		0.79	
400	TH	1.12	352	1.08	325	1.03	295	0.97	262	0.89	223	0.78	177
	SH	1.15		1.09		1.03		0.96		0.87		0.75	
600	TH	1.12	366	1.08	338	1.03	308	0.97	274	0.90	236	0.80	190
	SH	1.14		1.09		1.03		0.96		0.88		0.76	
800	TH	1.09	468	1.06	438	1.02	406	0.98	372	0.93	334	0.87	291
	SH	1.11		1.07		1.03		0.97		0.91		0.84	
1000	TH	1.10	667	1.06	622	1.02	574	0.97	521	0.92	462	0.85	395
	SH	1.12		1.08		1.03		0.97		0.90		0.82	
1200	TH	1.12	704	1.08	651	1.03	592	0.97	527	0.89	452	0.79	363
	SH	1.15		1.09		1.03		0.96		0.87		0.76	
1400	TH	1.09	889	1.06	832	1.02	771	0.98	705	0.93	632	0.86	550
	SH	1.11		1.07		1.03		0.97		0.91		0.84	

CF：Correction Factor H：Total Heat SH：Sensible Heat

Fan Speed：MEDIUM

◀65·66

Unit Size	TH/ SH	External Static Pressure (Pa)											
		0		20		40		60		80		100	
		CF	L/s	CF	L/s	CF	L/s	CF	L/s	CF	L/s	CF	L/s
300	TH	1.05	178	1.01	164	0.96	149	0.91	133	0.84	115	0.74	93
	SH	1.06		1.01		0.96		0.89		0.81		0.70	
400	TH	1.08	325	1.04	299	0.99	270	0.92	238	0.84	200	0.73	153
	SH	1.09		1.04		0.98		0.91		0.81		0.68	
600	TH	1.08	339	1.04	312	0.99	283	0.93	250	0.85	213	0.74	167
	SH	1.09		1.04		0.98		0.91		0.82		0.70	
800	TH	1.06	436	1.02	408	0.99	378	0.94	345	0.90	309	0.83	268
	SH	1.07		1.03		0.98		0.93		0.87		0.80	
1000	TH	1.06	615	1.02	573	0.98	527	0.94	477	0.88	422	0.80	357
	SH	1.07		1.03		0.98		0.92		0.85		0.77	
1200	TH	1.08	654	1.04	601	0.98	542	0.92	477	0.84	401	0.72	306
	SH	1.10		1.05		0.98		0.91		0.81		0.67	
1400	TH	1.06	839	1.03	785	0.99	726	0.95	663	0.90	593	0.83	513
	SH	1.08		1.04		0.99		0.94		0.88		0.80	

CF：Correction Factor H：Total Heat SH：Sensible Heat

Note: The above Rating Correction Factors due to External Static Pressure and Air Flow Rate are based on BASIC Model SRC.
When return-air plenum is used with the basic unit, these correction factors are subject to change. Derating factors will increase.
Consult SINKO distributor for specific derating factors.

Ceiling Recessed Model-Large Air Volume Model 3-Row Cooling, 1-Row Heating

SRC-2SH-DC2 220V

Fan Speed：HIGH

Unit Size	TH/ SH	External Static Pressure (Pa)											
		0		20		40		60		80		100	
		CF	L/s	CF	L/s	CF	L/s	CF	L/s	CF	L/s	CF	L/s
300	TH	1.11	184	1.07	171	1.03	156	0.97	141	0.90	123	0.80	102
	SH	1.14		1.09		1.03		0.96		0.88		0.77	
400	TH	1.13	312	1.08	287	1.03	261	0.96	231	0.88	197	0.76	156
	SH	1.15		1.10		1.04		0.96		0.86		0.72	
600	TH	1.12	334	1.08	308	1.03	281	0.97	250	0.89	215	0.78	173
	SH	1.15		1.10		1.04		0.96		0.87		0.74	
800	TH	1.09	450	1.06	422	1.02	391	0.98	358	0.93	321	0.86	280
	SH	1.11		1.07		1.03		0.97		0.91		0.83	
1000	TH	1.11	587	1.07	547	1.02	505	0.97	458	0.91	407	0.83	347
	SH	1.13		1.08		1.03		0.97		0.89		0.80	
1200	TH	1.13	680	1.08	628	1.03	572	0.97	509	0.88	437	0.77	350
	SH	1.16		1.10		1.04		0.96		0.86		0.74	
1400	TH	1.10	803	1.06	751	1.02	696	0.98	637	0.92	571	0.85	496
	SH	1.12		1.07		1.03		0.97		0.90		0.82	

CF：Correction Factor H：Total Heat SH：Sensible Heat

Fan Speed：MEDIUM

Unit Size	TH/ SH	External Static Pressure (Pa)											
		0		20		40		60		80		100	
		CF	L/s	CF	L/s	CF	L/s	CF	L/s	CF	L/s	CF	L/s
300	TH	1.06	166	1.02	153	0.97	140	0.91	124	0.84	107	0.73	86
	SH	1.07		1.02		0.96		0.90		0.81		0.69	
400	TH	1.09	289	1.04	265	0.99	240	0.92	211	0.83	177	0.70	136
	SH	1.11		1.05		0.99		0.91		0.80		0.66	
600	TH	1.09	309	1.04	285	0.99	258	0.92	228	0.84	194	0.72	152
	SH	1.10		1.05		0.98		0.91		0.81		0.68	
800	TH	1.07	426	1.03	399	1.00	369	0.95	337	0.90	302	0.83	261
	SH	1.08		1.04		0.99		0.94		0.88		0.80	
1000	TH	1.08	553	1.04	515	0.99	474	0.94	429	0.88	379	0.80	321
	SH	1.09		1.04		0.99		0.93		0.86		0.76	
1200	TH	1.09	635	1.04	583	0.99	526	0.92	463	0.83	389	0.70	297
	SH	1.11		1.05		0.98		0.90		0.80		0.65	
1400	TH	1.07	769	1.04	719	1.00	666	0.95	608	0.90	543	0.83	470
	SH	1.09		1.05		1.00		0.94		0.88		0.80	

CF：Correction Factor H：Total Heat SH：Sensible Heat

Note: The above Rating Correction Factors due to External Static Pressure and Air Flow Rate are based on BASIC Model SRC.
When return-air plenum is used with the basic unit, these correction factors are subject to change. Derating factors will increase.
Consult SINKO distributor for specific derating factors.

Ceiling Recessed Model-Large Air Volume Model 4-Row, High Temperature Rise

SRC-2SH-HT 220V

Fan Speed : HIGH

Unit Size	TH/ SH	External Static Pressure (Pa)											
		0		20		40		60		80		100	
		CF	L/s	CF	L/s	CF	L/s	CF	L/s	CF	L/s	CF	L/s
300	TH	1.15	184	1.09	171	1.03	156	0.97	141	0.88	123	0.77	102
	SH	1.18		1.11		1.04		0.96		0.86		0.73	
400	TH	1.16	312	1.10	287	1.04	261	0.96	231	0.86	197	0.72	156
	SH	1.19		1.12		1.04		0.95		0.84		0.68	
600	TH	1.15	334	1.10	308	1.04	281	0.96	250	0.86	215	0.74	173
	SH	1.19		1.12		1.04		0.95		0.84		0.69	
800	TH	1.11	450	1.07	422	1.03	391	0.97	358	0.91	321	0.83	280
	SH	1.14		1.09		1.03		0.97		0.89		0.80	
1000	TH	1.13	587	1.08	547	1.03	505	0.97	458	0.89	407	0.80	347
	SH	1.15		1.10		1.04		0.96		0.88		0.77	
1200	TH	1.15	680	1.10	628	1.04	572	0.96	509	0.87	437	0.74	350
	SH	1.18		1.12		1.04		0.95		0.84		0.70	
1400	TH	1.12	803	1.07	751	1.03	696	0.97	637	0.91	571	0.83	496
	SH	1.14		1.09		1.03		0.97		0.89		0.79	

CF：Correction Factor H：Total Heat SH：Sensible Heat

Fan Speed : MEDIUM

◀67·68

Unit Size	TH/ SH	External Static Pressure (Pa)											
		0		20		40		60		80		100	
		CF	L/s	CF	L/s	CF	L/s	CF	L/s	CF	L/s	CF	L/s
300	TH	1.08	166	1.03	153	0.97	140	0.90	124	0.81	107	0.69	86
	SH	1.10		1.03		0.96		0.88		0.77		0.64	
400	TH	1.11	289	1.05	265	0.99	240	0.91	211	0.80	177	0.66	136
	SH	1.13		1.06		0.99		0.89		0.77		0.61	
600	TH	1.11	309	1.05	285	0.99	258	0.91	228	0.81	194	0.67	152
	SH	1.13		1.06		0.98		0.89		0.78		0.62	
800	TH	1.08	426	1.04	399	1.00	369	0.94	337	0.88	302	0.80	261
	SH	1.10		1.05		0.99		0.93		0.85		0.76	
1000	TH	1.09	553	1.05	515	0.99	474	0.93	429	0.86	379	0.76	321
	SH	1.11		1.06		0.99		0.92		0.83		0.72	
1200	TH	1.11	635	1.05	583	0.99	526	0.91	463	0.80	389	0.65	297
	SH	1.13		1.06		0.98		0.89		0.77		0.60	
1400	TH	1.09	769	1.05	719	1.00	666	0.95	608	0.88	543	0.80	470
	SH	1.11		1.06		1.00		0.94		0.86		0.76	

CF：Correction Factor H：Total Heat SH：Sensible Heat

Note: The above Rating Correction Factors due to External Static Pressure and Air Flow Rate are based on BASIC Model SRC.
When return-air plenum is used with the basic unit, these correction factors are subject to change. Derating factors will increase.
Consult SINKO distributor for specific derating factors.

Ceiling Recessed, High Static Model-High Static, Large Air Volume Model 4-Row Cooling/Heating

TCRH-2HW-4R 220V

Fan Speed：HIGH

Unit Size	TH/ SH	External Static Pressure (Pa)													
		0		25		50		75		100		125		150	
		CF	L/s	CF	L/s	CF	L/s	CF	L/s	CF	L/s	CF	L/s	CF	L/s
600	TH	1.10	448	1.09	444	1.07	434	1.04	416	1.00	390	0.95	358	0.88	319
	SH	1.12		1.11		1.08		1.05		1.00		0.94		0.86	
1000	TH	1.13	749	1.11	741	1.09	718	1.05	681	1.00	627	0.93	559	0.84	476
	SH	1.17		1.15		1.12		1.07		1.00		0.91		0.80	
1200	TH	1.11	777	1.10	770	1.08	749	1.05	713	1.00	663	0.94	599	0.86	521
	SH	1.15		1.13		1.10		1.06		1.00		0.92		0.82	
1600	TH	1.13	1082	1.12	1070	1.09	1035	1.05	976	1.00	893	0.93	788	0.83	659
	SH	1.17		1.15		1.12		1.07		1.00		0.91		0.79	
2000	TH	1.13	1297	1.12	1284	1.09	1243	1.05	1174	1.00	1079	0.93	956	0.84	807
	SH	1.17		1.15		1.12		1.07		1.00		0.91		0.79	

CF：Correction Factor H：Total Heat SH：Sensible Heat

Fan Speed：MEDIUM

Unit Size	TH/ SH	External Static Pressure (Pa)													
		0		25		50		75		100		125		150	
		CF	L/s	CF	L/s	CF	L/s	CF	L/s	CF	L/s	CF	L/s	CF	L/s
600	TH	1.02	387	1.01	384	1.00	376	0.97	362	0.94	343	0.90	318	0.84	288
	SH	1.03		1.02		1.00		0.97		0.93		0.88		0.81	
1000	TH	1.04	643	1.03	637	1.01	618	0.97	586	0.92	541	0.86	483	0.78	412
	SH	1.05		1.04		1.01		0.96		0.90		0.82		0.72	
1200	TH	1.08	733	1.07	726	1.04	705	1.01	670	0.96	621	0.90	558	0.82	482
	SH	1.10		1.09		1.06		1.01		0.95		0.87		0.78	
1600	TH	1.07	979	1.06	968	1.04	936	1.00	884	0.95	810	0.88	715	0.79	599
	SH	1.09		1.08		1.05		1.00		0.94		0.85		0.74	
2000	TH	1.09	1210	1.08	1198	1.05	1161	1.02	1101	0.97	1016	0.90	907	0.82	774
	SH	1.12		1.10		1.07		1.02		0.96		0.88		0.77	

CF：Correction Factor H：Total Heat SH：Sensible Heat

Note: The above Rating Correction Factors due to External Static Pressure and Air Flow Rate are based on BASIC Model SRC.
When return-air plenum is used with the basic unit, these correction factors are subject to change. Derating factors will increase.
Consult SINKO distributor for specific derating factors.

Ceiling Recessed, High Static Model-High Static, Large Air Volume Model 6-Row Cooling/Heating

TCRH-2HW-6R 220V

Fan Speed : HIGH

Unit Size	TH/ SH	External Static Pressure (Pa)													
		0		25		50		75		100		125		150	
		CF	L/s	CF	L/s	CF	L/s	CF	L/s	CF	L/s	CF	L/s	CF	L/s
600	TH	1.17	413	1.14	395	1.10	374	1.05	350	1.00	323	0.94	293	0.86	260
	SH	1.23		1.18		1.13		1.07		1.00		0.92		0.83	
1000	TH	1.20	665	1.16	630	1.11	589	1.06	543	1.00	492	0.93	436	0.84	373
	SH	1.26		1.21		1.15		1.08		1.00		0.91		0.80	
1200	TH	1.19	735	1.15	703	1.11	665	1.06	619	1.00	566	0.93	508	0.84	441
	SH	1.24		1.20		1.14		1.08		1.00		0.91		0.81	
1600	TH	1.20	1022	1.17	973	1.12	913	1.07	841	1.00	759	0.92	665	0.82	559
	SH	1.27		1.22		1.16		1.09		1.00		0.90		0.77	
2000	TH	1.20	1231	1.16	1174	1.12	1104	1.07	1020	1.00	923	0.92	813	0.82	688
	SH	1.27		1.22		1.16		1.09		1.00		0.90		0.78	

CF : Correction Factor H : Total Heat SH : Sensible Heat

Fan Speed : MEDIUM

Unit Size	TH/ SH	External Static Pressure (Pa)													
		0		25		50		75		100		125		150	
		CF	L/s	CF	L/s	CF	L/s	CF	L/s	CF	L/s	CF	L/s	CF	L/s
600	TH	1.10	368	1.07	354	1.04	338	1.00	319	0.95	297	0.90	273	0.84	245
	SH	1.13		1.09		1.05		1.00		0.94		0.87		0.80	
1000	TH	1.14	602	1.10	574	1.06	539	1.01	499	0.95	454	0.88	402	0.80	344
	SH	1.18		1.13		1.08		1.02		0.94		0.85		0.75	
1200	TH	1.16	705	1.13	676	1.09	640	1.04	596	0.97	544	0.90	486	0.81	419
	SH	1.21		1.16		1.11		1.04		0.97		0.88		0.77	
1600	TH	1.15	943	1.12	903	1.08	850	1.03	786	0.96	711	0.88	623	0.79	524
	SH	1.20		1.16		1.10		1.04		0.95		0.85		0.74	
2000	TH	1.15	1137	1.11	1084	1.07	1019	1.02	944	0.96	858	0.89	761	0.80	650
	SH	1.20		1.15		1.09		1.03		0.95		0.86		0.75	

CF : Correction Factor H : Total Heat SH : Sensible Heat

◀69·70

Note: The above Rating Correction Factors due to External Static Pressure and Air Flow Rate are based on BASIC Model SRC.
When return-air plenum is used with the basic unit, these correction factors are subject to change. Derating factors will increase.
Consult SINKO distributor for specific derating factors.

Ceiling Recessed, High Static Model-High Static, Large Air Volume Model 3-Row Cooling, 1-Row Heating

TCRH-2HW-DC2 220V

Fan Speed：HIGH

Unit Size	TH/ SH	External Static Pressure (Pa)													
		0		25		50		75		100		125		150	
		CF	L/s	CF	L/s	CF	L/s	CF	L/s	CF	L/s	CF	L/s	CF	L/s
600	TH	1.08	448	1.07	444	1.06	434	1.03	416	1.00	390	0.96	358	0.90	319
	SH	1.09		1.09		1.07		1.04		1.00		0.95		0.88	
1000	TH	1.11	749	1.09	741	1.07	718	1.04	681	1.00	627	0.94	559	0.86	476
	SH	1.13		1.12		1.09		1.05		1.00		0.93		0.84	
1200	TH	1.10	777	1.09	770	1.07	749	1.04	713	1.00	663	0.94	599	0.87	521
	SH	1.13		1.11		1.09		1.05		1.00		0.93		0.85	
1600	TH	1.12	1082	1.11	1070	1.08	1035	1.05	976	1.00	893	0.93	788	0.84	659
	SH	1.15		1.13		1.10		1.06		1.00		0.92		0.82	
2000	TH	1.12	1297	1.11	1284	1.08	1243	1.05	1174	1.00	1079	0.93	956	0.85	807
	SH	1.15		1.13		1.10		1.06		1.00		0.92		0.82	

CF：Correction Factor H：Total Heat SH：Sensible Heat

Fan Speed：MEDIUM

Unit Size	TH/ SH	External Static Pressure (Pa)													
		0		25		50		75		100		125		150	
		CF	L/s	CF	L/s	CF	L/s	CF	L/s	CF	L/s	CF	L/s	CF	L/s
600	TH	1.01	387	1.00	384	0.99	376	0.97	362	0.94	343	0.91	318	0.86	288
	SH	1.01		1.00		0.99		0.97		0.93		0.89		0.83	
1000	TH	1.03	643	1.03	637	1.01	618	0.98	586	0.94	541	0.88	483	0.81	412
	SH	1.04		1.03		1.01		0.97		0.92		0.86		0.77	
1200	TH	1.07	733	1.06	726	1.04	705	1.01	670	0.97	621	0.91	558	0.83	482
	SH	1.09		1.08		1.05		1.01		0.96		0.89		0.81	
1600	TH	1.07	979	1.06	968	1.04	936	1.00	884	0.96	810	0.89	715	0.81	599
	SH	1.09		1.07		1.05		1.00		0.95		0.87		0.77	
2000	TH	1.08	1210	1.07	1198	1.05	1161	1.02	1101	0.97	1016	0.91	907	0.83	774
	SH	1.10		1.09		1.06		1.02		0.97		0.90		0.80	

CF：Correction Factor H：Total Heat SH：Sensible Heat

Note: The above Rating Correction Factors due to External Static Pressure and Air Flow Rate are based on BASIC Model SRC.
When return-air plenum is used with the basic unit, these correction factors are subject to change. Derating factors will increase.
Consult SINKO distributor for specific derating factors.

Ceiling Recessed, High Static Model-High Static, Large Air Volume Model 4-Row Cooling, 1-Row Heating

TCRH-2HW-DC3 220V

Fan Speed : HIGH

Unit Size	TH/ SH	External Static Pressure (Pa)													
		0		25		50		75		100		125		150	
		CF	L/s	CF	L/s	CF	L/s	CF	L/s	CF	L/s	CF	L/s	CF	L/s
600	TH	1.14	437	1.12	423	1.08	404	1.05	381	1.00	353	0.94	321	0.88	285
	SH	1.18		1.15		1.11		1.06		1.00		0.93		0.84	
1000	TH	1.18	720	1.15	690	1.11	651	1.06	604	1.00	549	0.93	486	0.84	415
	SH	1.23		1.19		1.14		1.08		1.00		0.91		0.80	
1200	TH	1.15	765	1.13	742	1.09	708	1.05	664	1.00	610	0.94	548	0.86	476
	SH	1.19		1.16		1.12		1.07		1.00		0.92		0.82	
1600	TH	1.16	1064	1.14	1028	1.10	975	1.06	905	1.00	819	0.93	719	0.83	602
	SH	1.22		1.18		1.14		1.08		1.00		0.90		0.79	
2000	TH	1.16	1278	1.14	1237	1.10	1174	1.06	1093	1.00	993	0.93	876	0.84	740
	SH	1.22		1.18		1.14		1.08		1.00		0.91		0.79	

CF : Correction Factor H : Total Heat SH : Sensible Heat

Fan Speed : MEDIUM

Unit Size	TH/ SH	External Static Pressure (Pa)													
		0		25		50		75		100		125		150	
		CF	L/s	CF	L/s	CF	L/s	CF	L/s	CF	L/s	CF	L/s	CF	L/s
600	TH	1.06	381	1.04	372	1.02	358	0.98	340	0.94	318	0.90	293	0.84	264
	SH	1.07		1.05		1.02		0.98		0.93		0.87		0.80	
1000	TH	1.10	631	1.07	610	1.04	579	1.00	540	0.94	492	0.87	437	0.79	373
	SH	1.13		1.10		1.05		0.99		0.92		0.84		0.74	
1200	TH	1.12	725	1.10	705	1.06	674	1.02	632	0.97	580	0.91	518	0.82	447
	SH	1.15		1.12		1.08		1.03		0.96		0.88		0.78	
1600	TH	1.11	968	1.09	940	1.06	894	1.01	833	0.96	756	0.89	665	0.80	557
	SH	1.14		1.12		1.07		1.02		0.95		0.86		0.75	
2000	TH	1.12	1188	1.09	1149	1.06	1091	1.02	1018	0.96	929	0.90	825	0.81	704
	SH	1.16		1.13		1.08		1.02		0.95		0.87		0.77	

CF : Correction Factor H : Total Heat SH : Sensible Heat

◀71·72

Note: The above Rating Correction Factors due to External Static Pressure and Air Flow Rate are based on BASIC Model SRC.
When return-air plenum is used with the basic unit, these correction factors are subject to change. Derating factors will increase.
Consult SINKO distributor for specific derating factors.

Ceiling Recessed, High Static Model-High Static, Large Air Volume Model 4-Row Cooling, 2-Row Heating

TCRH-2HW-DC4 220V

Fan Speed：HIGH

Unit Size	TH/ SH	External Static Pressure (Pa)													
		0		25		50		75		100		125		150	
		CF	L/s	CF	L/s	CF	L/s	CF	L/s	CF	L/s	CF	L/s	CF	L/s
600	TH	1.16	413	1.13	395	1.09	374	1.05	350	1.00	323	0.94	293	0.87	260
	SH	1.21		1.17		1.12		1.06		1.00		0.93		0.84	
1000	TH	1.19	665	1.16	630	1.11	589	1.06	543	1.00	492	0.93	436	0.84	373
	SH	1.26		1.21		1.15		1.08		1.00		0.91		0.80	
1200	TH	1.17	735	1.14	703	1.10	665	1.05	619	1.00	566	0.93	508	0.86	441
	SH	1.22		1.18		1.13		1.07		1.00		0.92		0.82	
1600	TH	1.18	1022	1.15	973	1.11	913	1.06	841	1.00	759	0.93	665	0.83	559
	SH	1.24		1.20		1.15		1.08		1.00		0.90		0.79	
2000	TH	1.18	1231	1.15	1174	1.11	1104	1.06	1020	1.00	923	0.93	813	0.84	688
	SH	1.24		1.20		1.15		1.08		1.00		0.91		0.79	

CF：Correction Factor H：Total Heat SH：Sensible Heat

Fan Speed：MEDIUM

Unit Size	TH/ SH	External Static Pressure (Pa)													
		0		25		50		75		100		125		150	
		CF	L/s	CF	L/s	CF	L/s	CF	L/s	CF	L/s	CF	L/s	CF	L/s
600	TH	1.08	368	1.06	354	1.03	338	1.00	319	0.95	297	0.90	273	0.85	245
	SH	1.11		1.08		1.04		0.99		0.94		0.88		0.81	
1000	TH	1.13	602	1.10	574	1.06	539	1.01	499	0.95	454	0.89	402	0.80	344
	SH	1.17		1.13		1.08		1.01		0.94		0.85		0.75	
1200	TH	1.14	705	1.11	676	1.08	640	1.03	596	0.98	544	0.91	486	0.83	419
	SH	1.19		1.15		1.10		1.04		0.97		0.89		0.79	
1600	TH	1.14	943	1.11	903	1.07	850	1.02	786	0.96	711	0.89	623	0.80	524
	SH	1.18		1.14		1.09		1.03		0.95		0.86		0.75	
2000	TH	1.13	1137	1.10	1084	1.06	1019	1.02	944	0.96	858	0.89	761	0.81	650
	SH	1.18		1.13		1.08		1.02		0.95		0.86		0.76	

CF：Correction Factor H：Total Heat SH：Sensible Heat

Note: The above Rating Correction Factors due to External Static Pressure and Air Flow Rate are based on BASIC Model SRC.
When return-air plenum is used with the basic unit, these correction factors are subject to change. Derating factors will increase.
Consult SINKO distributor for specific derating factors.

Ceiling Recessed, High Static Model-High Static, Large Air Volume Model 6-Row, High Temperature Rise

TCRH-2HW-HT 220V

Fan Speed：HIGH

Unit Size	TH/ SH	External Static Pressure (Pa)													
		0		25		50		75		100		125		150	
		CF	L/s	CF	L/s	CF	L/s	CF	L/s	CF	L/s	CF	L/s	CF	L/s
600	TH	1.18	413	1.14	395	1.10	374	1.05	350	1.00	323	0.94	293	0.86	260
	SH	1.23		1.19		1.13		1.07		1.00		0.92		0.83	
1000	TH	1.21	665	1.17	630	1.12	589	1.07	543	1.00	492	0.92	436	0.83	373
	SH	1.29		1.23		1.16		1.09		1.00		0.90		0.78	
1200	TH	1.19	735	1.16	703	1.11	665	1.06	619	1.00	566	0.93	508	0.84	441
	SH	1.26		1.21		1.15		1.08		1.00		0.91		0.80	
1600	TH	1.21	1022	1.17	973	1.12	913	1.07	841	1.00	759	0.92	665	0.82	559
	SH	1.28		1.23		1.17		1.09		1.00		0.89		0.77	
2000	TH	1.20	1231	1.16	1174	1.12	1104	1.07	1020	1.00	923	0.92	813	0.82	688
	SH	1.27		1.22		1.16		1.09		1.00		0.90		0.77	

CF：Correction Factor H：Total Heat SH：Sensible Heat

Fan Speed：MEDIUM

Unit Size	TH/ SH	External Static Pressure (Pa)													
		0		25		50		75		100		125		150	
		CF	L/s	CF	L/s	CF	L/s	CF	L/s	CF	L/s	CF	L/s	CF	L/s
600	TH	1.10	368	1.07	354	1.04	338	1.00	319	0.95	297	0.90	273	0.84	245
	SH	1.13		1.10		1.05		1.00		0.94		0.87		0.79	
1000	TH	1.15	602	1.11	574	1.07	539	1.02	499	0.95	454	0.88	402	0.79	344
	SH	1.20		1.15		1.09		1.02		0.94		0.85		0.74	
1200	TH	1.16	705	1.13	676	1.09	640	1.04	596	0.97	544	0.90	486	0.81	419
	SH	1.22		1.17		1.12		1.05		0.97		0.87		0.76	
1600	TH	1.16	943	1.13	903	1.08	850	1.03	786	0.96	711	0.88	623	0.79	524
	SH	1.21		1.17		1.11		1.04		0.95		0.85		0.73	
2000	TH	1.15	1137	1.12	1084	1.07	1019	1.02	944	0.96	858	0.89	761	0.80	650
	SH	1.20		1.16		1.10		1.03		0.95		0.86		0.75	

CF：Correction Factor H：Total Heat SH：Sensible Heat

◀73·74

Note: The above Rating Correction Factors due to External Static Pressure and Air Flow Rate are based on BASIC Model SRC.
When return-air plenum is used with the basic unit, these correction factors are subject to change. Derating factors will increase.
Consult SINKO distributor for specific derating factors.

Ceiling Recessed Model-Standard Model

SRC-2SW 220V

SRC-300-2SW

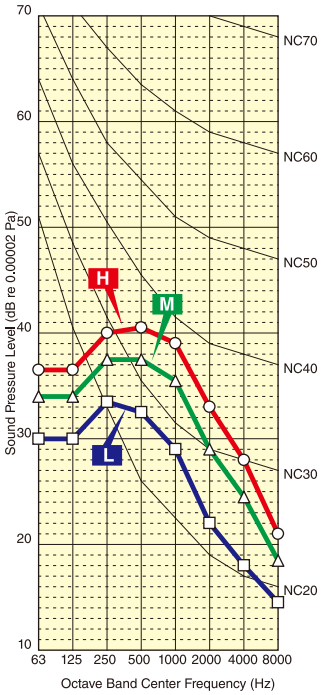

SRC-400-2SW

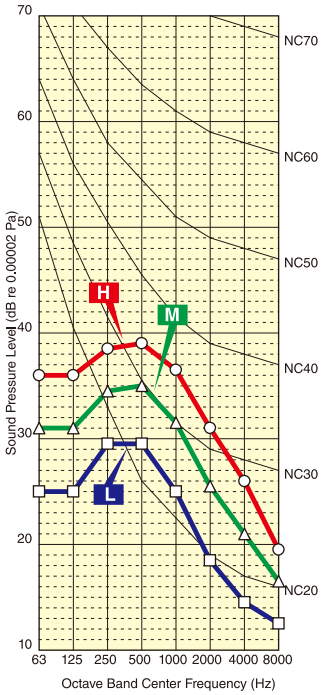

SRC-600-2SW

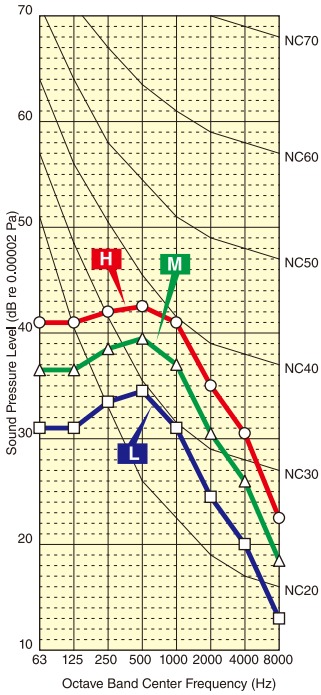

SRC-800-2SW

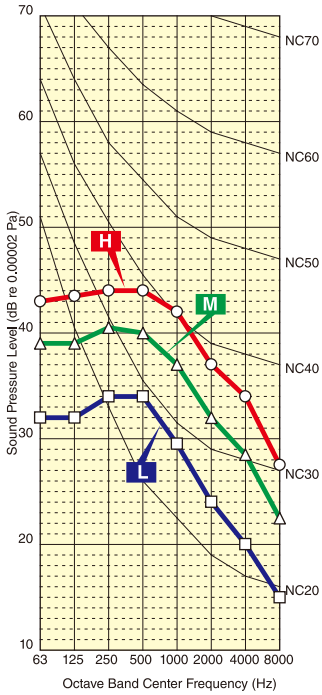

SRC-1000-2SW

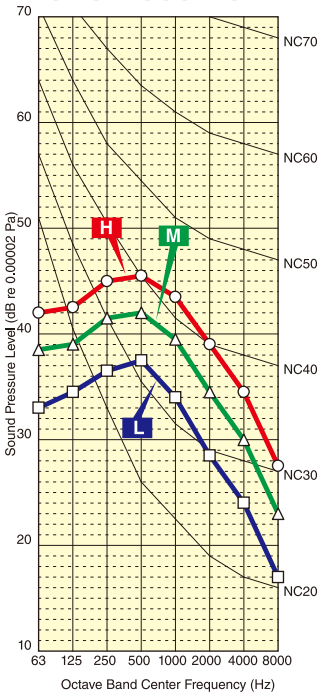

SRC-1200-2SW

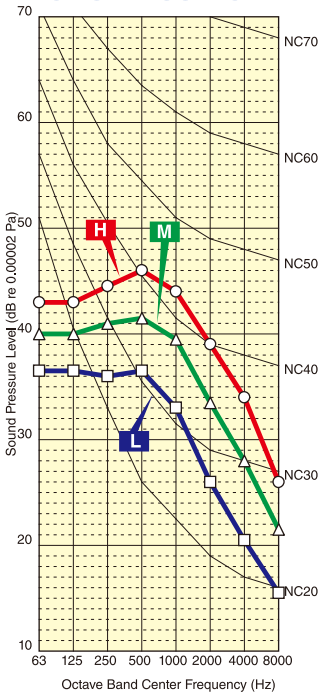

SRC-1400-2SW

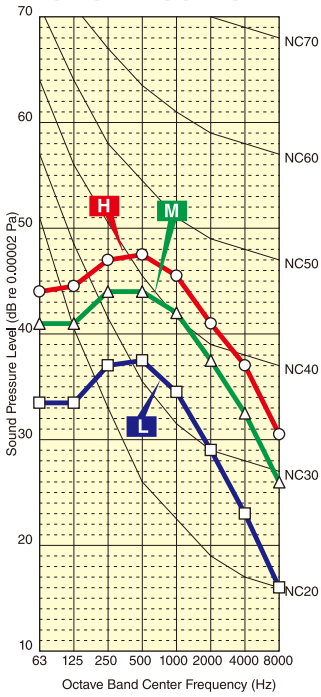

Note: SPL is measured in a semi-anechoic room according to JIS A 4008.

Ceiling Recessed Model-High Static Model

SRC-2HW 220V

SRC-300-2HW

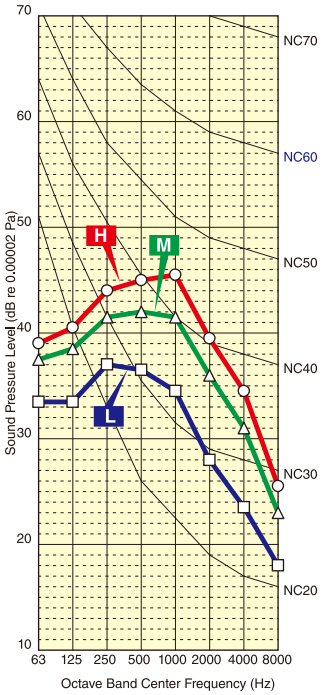

SRC-400-2HW

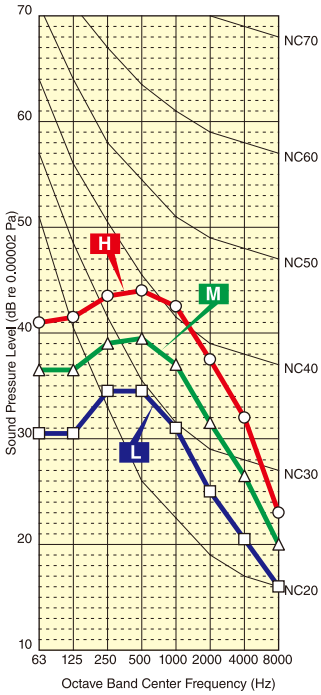

SRC-600-2HW

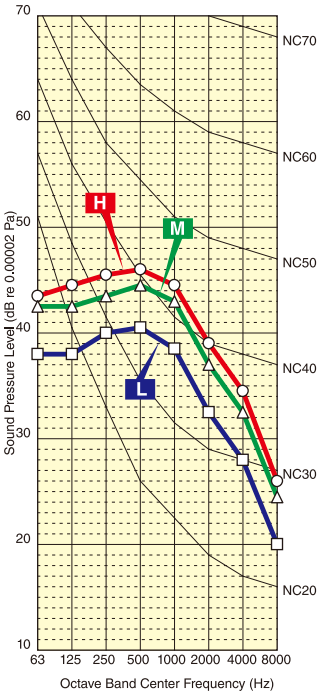

SRC-800-2HW

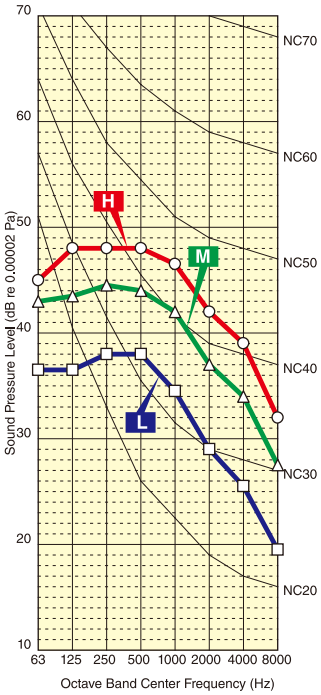

SRC-1000-2HW

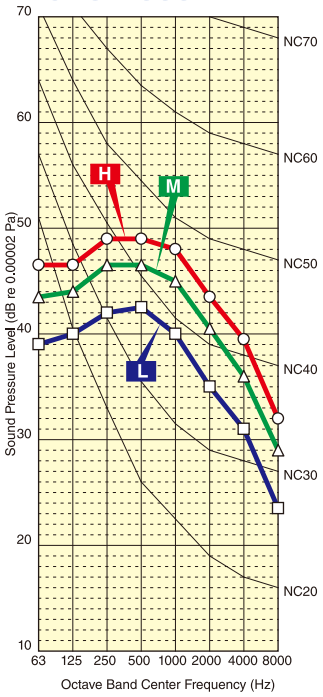

SRC-1200-2HW

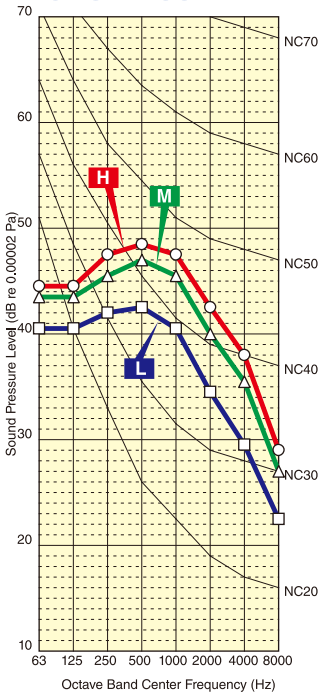

SRC-1400-2HW

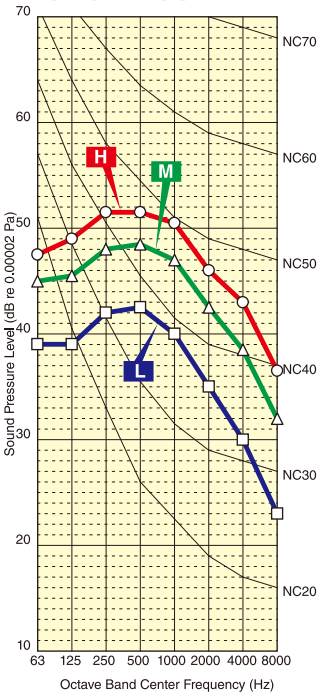

Note: SPL is measured in a semi-anechoic room according to JIS A 4008.

◀ 75
76

Ceiling Recessed Model-Large Air Volume Model

SRC-2SH 220V

SRC-300-2SH

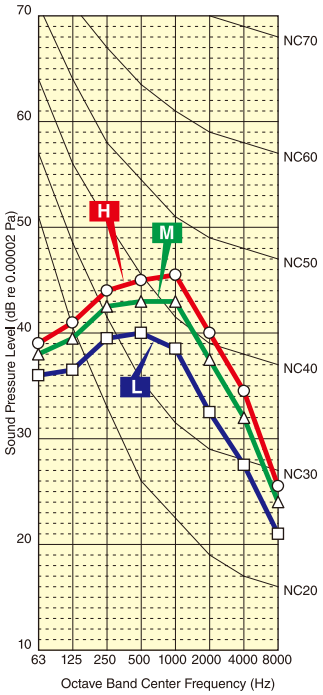

SRC-400-2SH

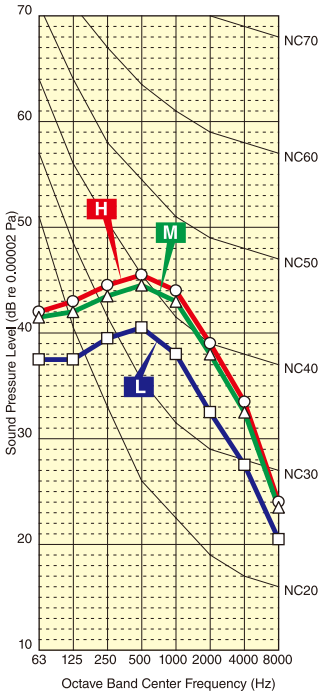

SRC-600-2SH

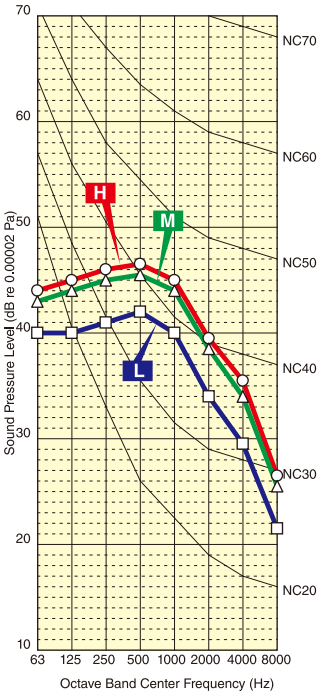

SRC-800-2SW

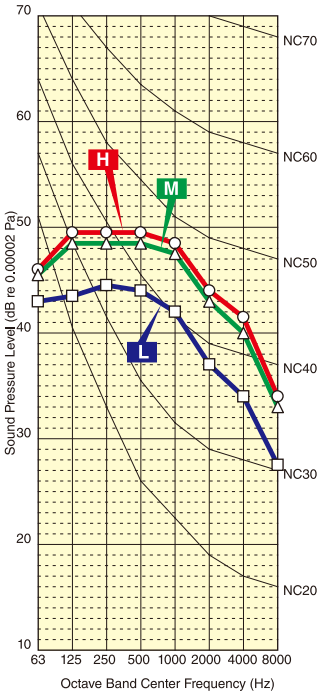

SRC-1000-2SH

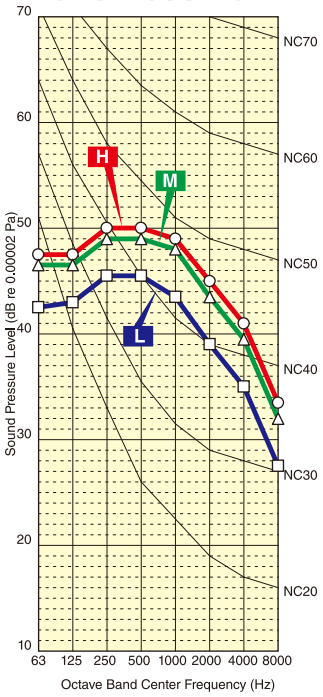

SRC-1200-2SH

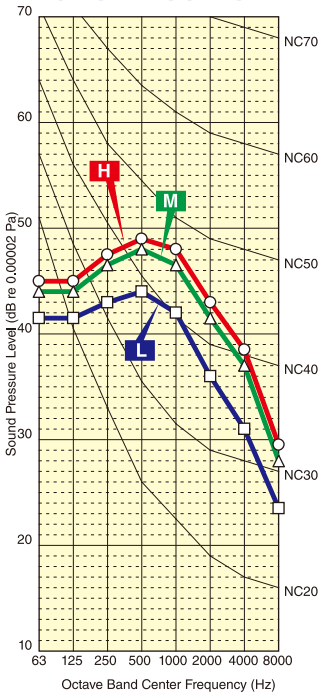

SRC-1400-2SH

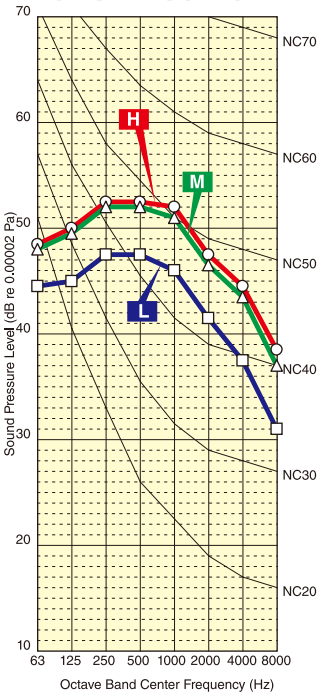

Note: SPL is measured in a semi-anechoic room according to JIS A 4008.

Ceiling Recessed, High Static, Large Air Volume Model

TCRH-2HW ESP=100Pa 220V

TCRH-600-2HW

ESP=100Pa

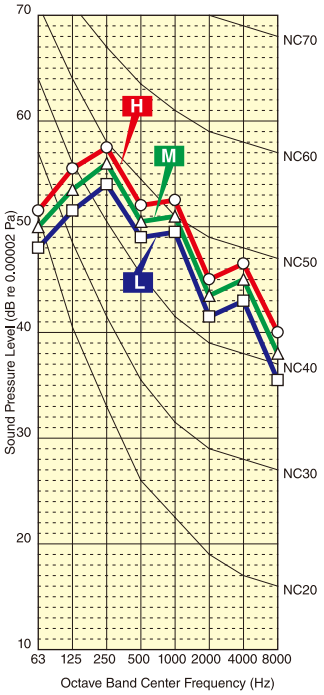

TCRH-1000-2HW

ESP=100Pa

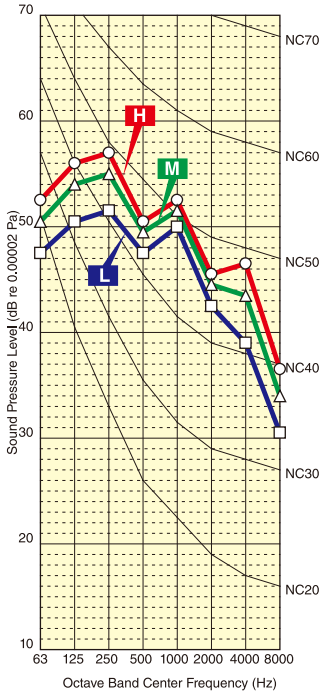

TCRH-1200-2HW

ESP=100Pa

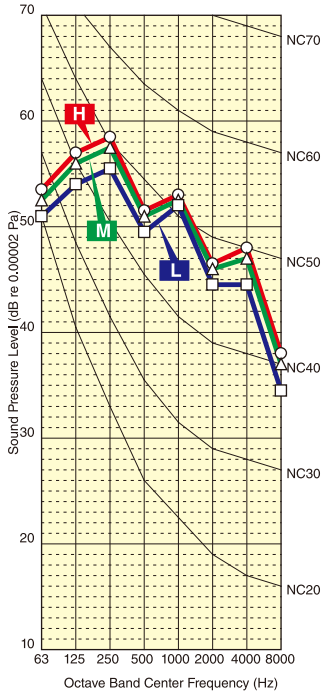

TCRH-1600-2HW

ESP=100Pa

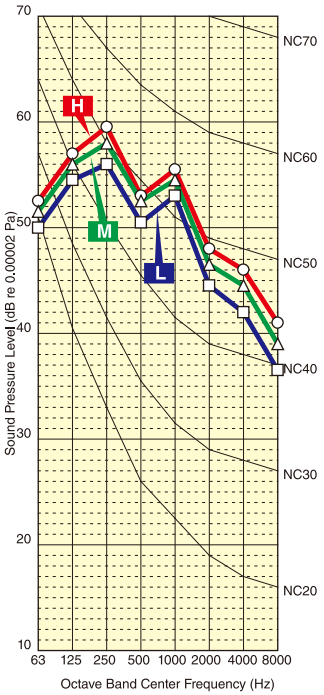

TCRH-2000-2HW

ESP=100Pa

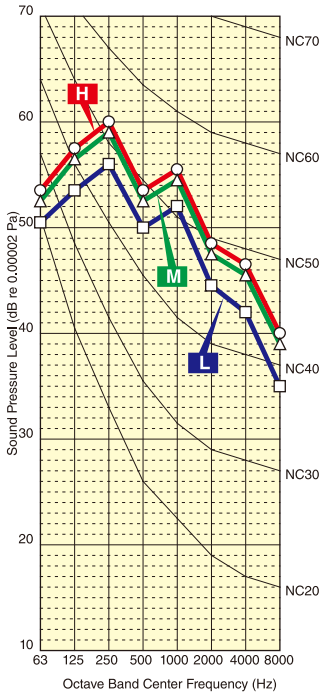

Note: SPL is measured in a semi-anechoic room according to JIS A 4008.

◀ 77
78·79▶

Ceiling Recessed, High Static, Large Air Volume Model

TCRH-2HW ESP=150Pa 220V

TCRH-600-2HW

ESP=150Pa

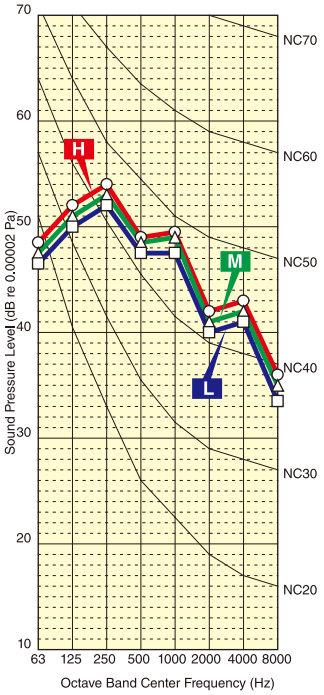

TCRH-1000-2HW

ESP=150Pa

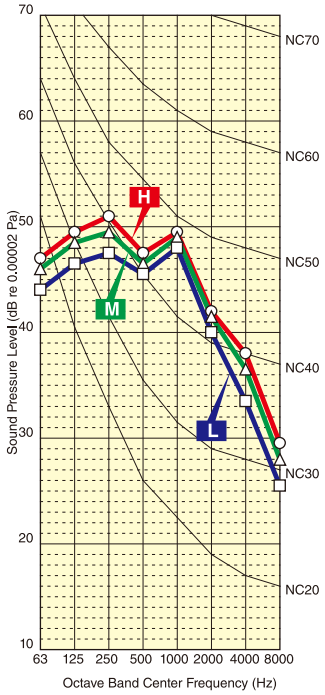

TCRH-1200-2HW

ESP=150Pa

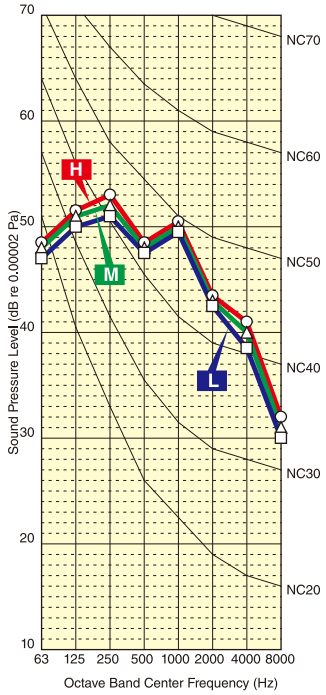

TCRH-1600-2HW

ESP=150Pa

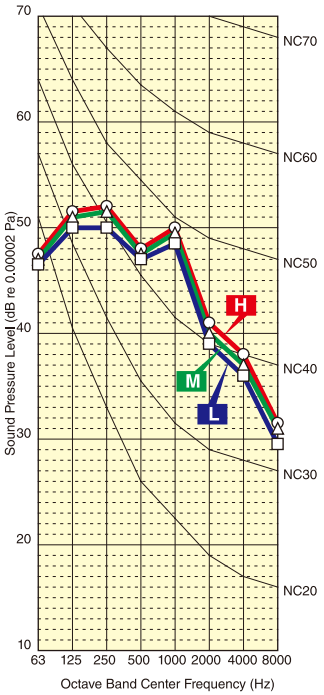

TCRH-2000-2HW

ESP=150Pa

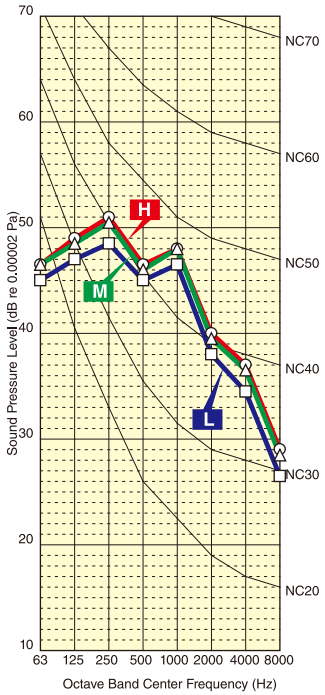

Note: SPL is measured in a semi-anechoic room according to JIS A 4008.

FAN COIL UNIT 220V

(Optional Component and Reference data)

Option

Optional Component Lineup 81

Valves
Ball Valve 81
Strainer
Motorized 2-way Valve
Aluminum Filter
Saranet Filter
Coated Fin
Secondary Drain Pan

Wiring Diagram 82

Referential Data

Maintenance Time Table 83
Unit Construction 84
Installation Guide 85

Summary of FCU Optional Component

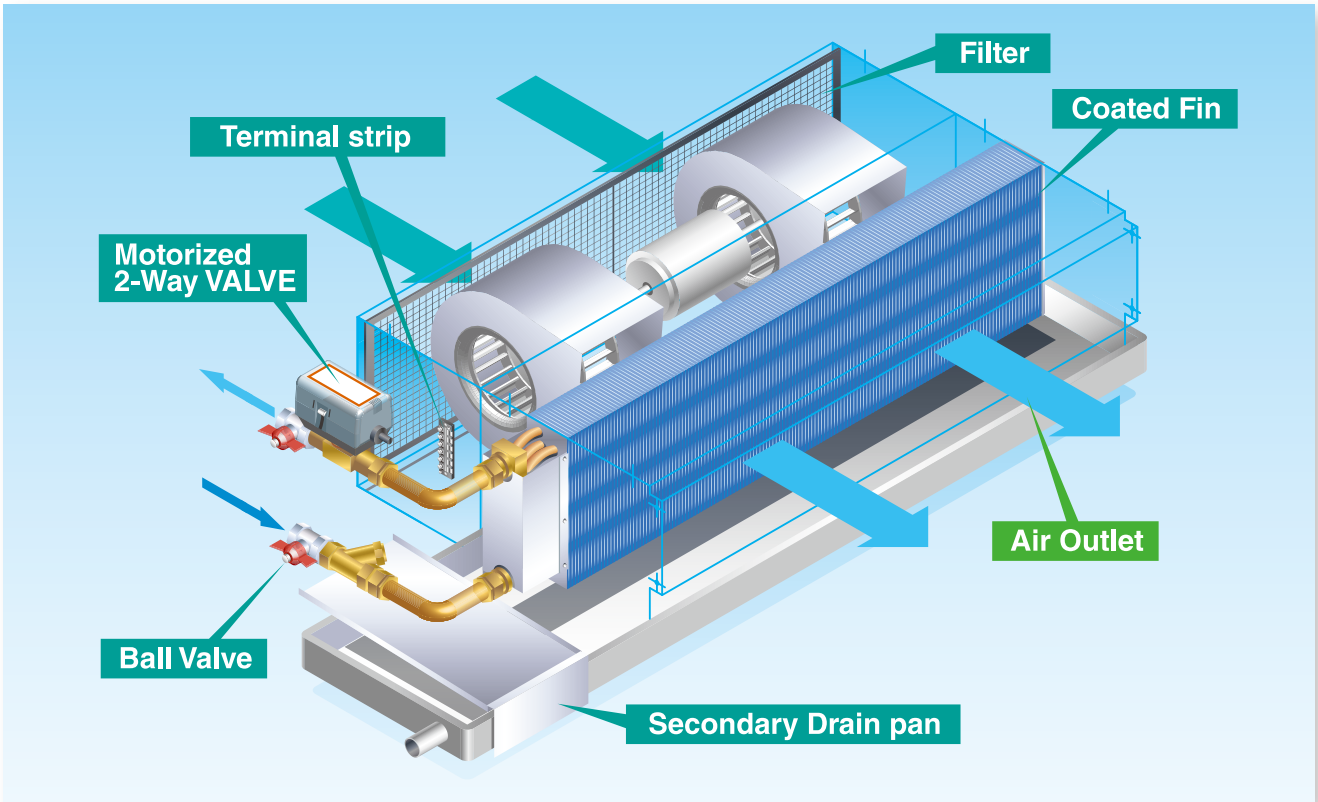

Ball Valve

Strainer

Aluminum Filter

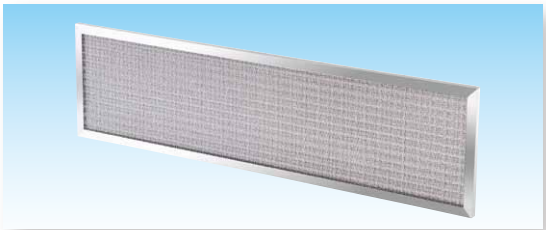

Motorized 2-way Valve

Saranet Filter

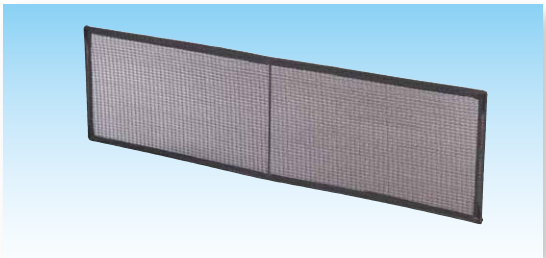

Coated Fin

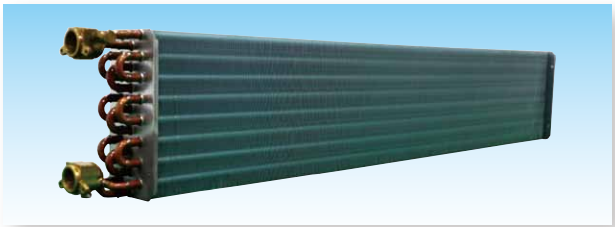

Secondary Drain Pan

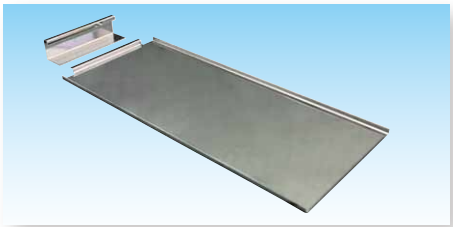

Wiring Diagram

SRC MODEL AC220V

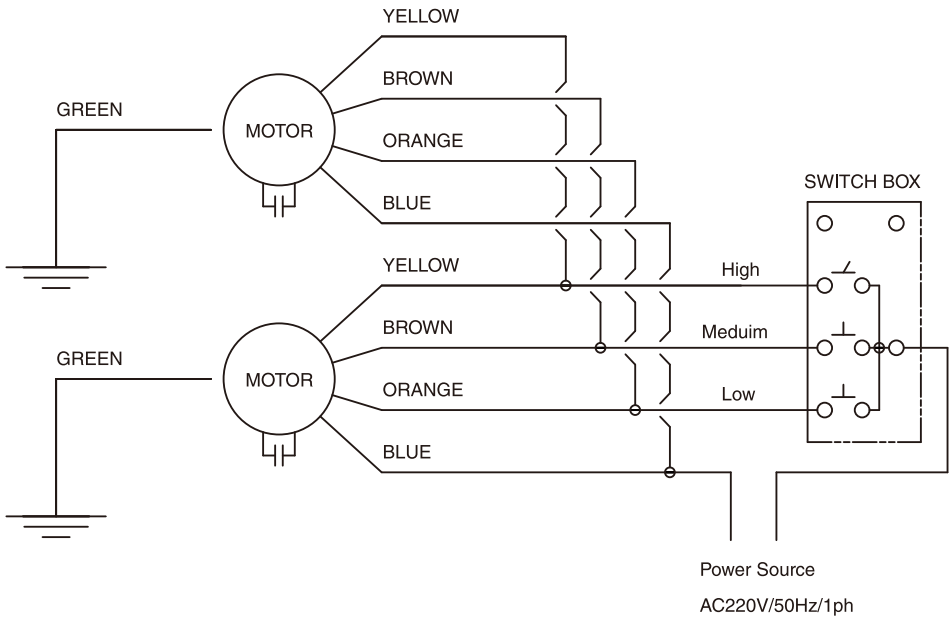

TCRH MODEL AC220V

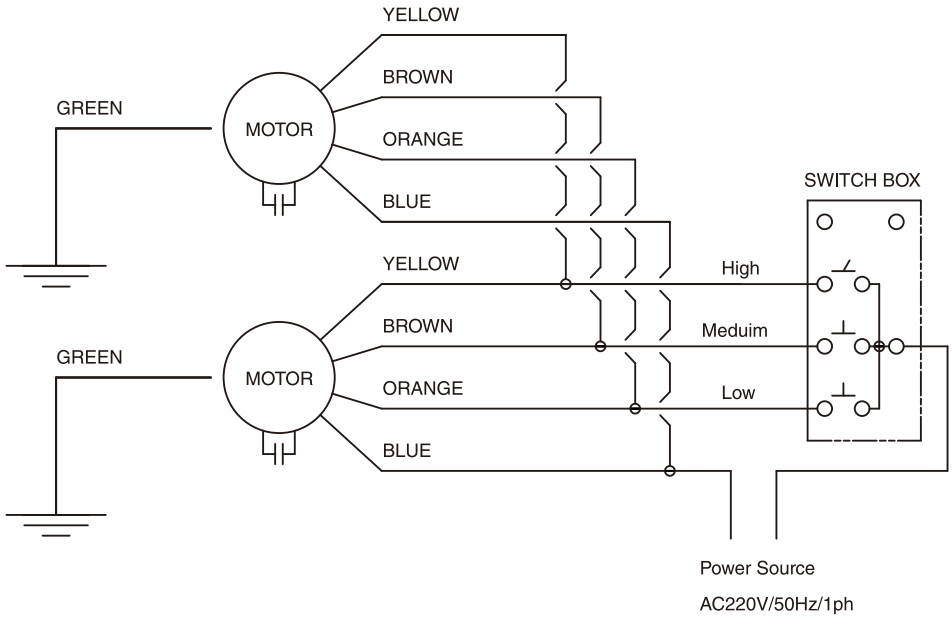

Note:
Electrical connection should be made to the unit according to local codes and ordinances.

◀ 81
◀ 81
82

Standard Maintenance Guide for Fan Coil Unit

The maintenance guide below is the general guide line. The contents may change according to the running/installation conditions.

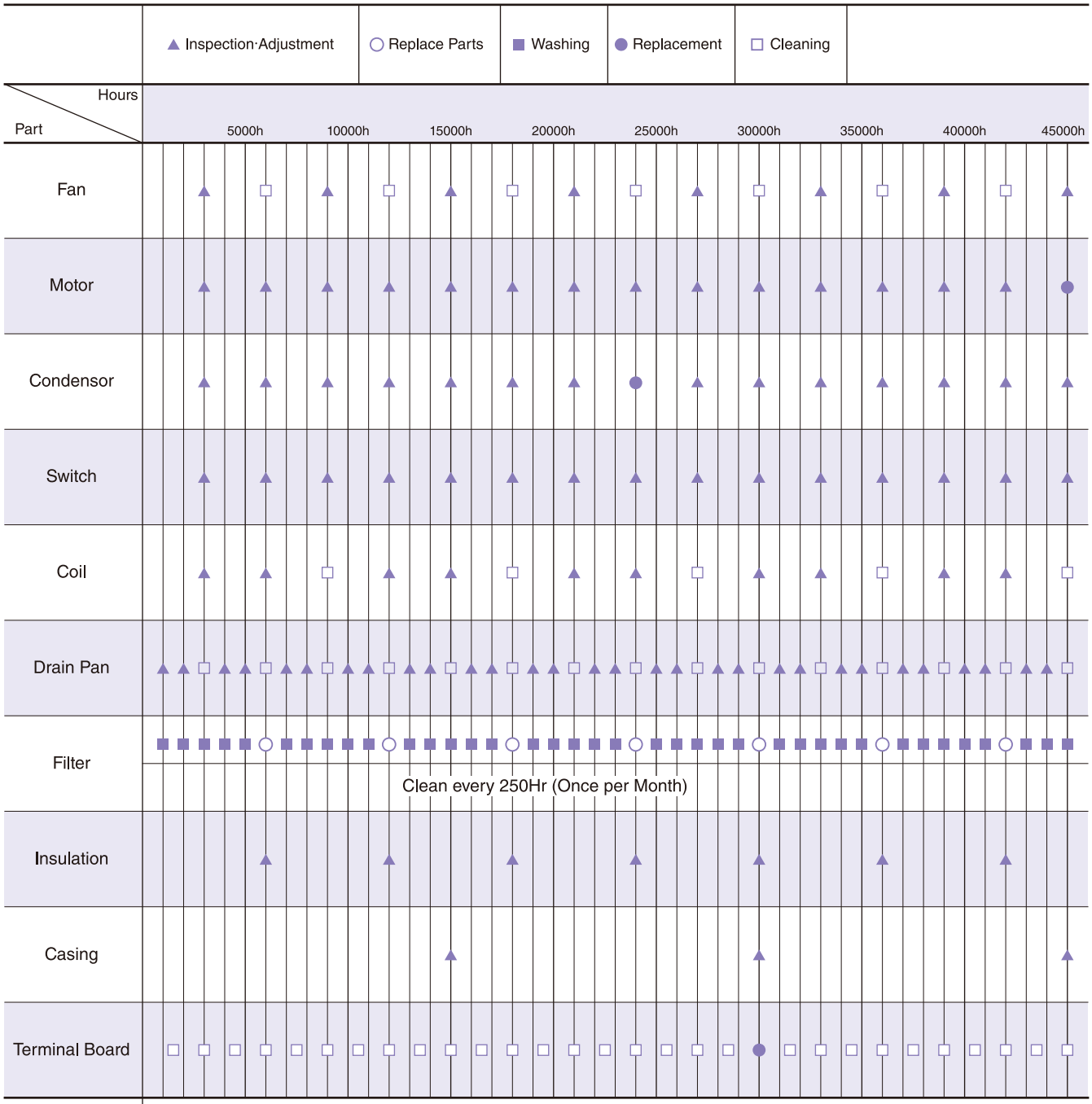

Note	
	1. Running time is based on 10hr/day, 300days/year, 3000hr/year., 2. In case of non-standard unit, the maintenance cycle will change. 3. Maintenance cycle of filter will change according to the installation condition. 4. Maintenance of motor shall be conducted by professionals.

Unit Construction

Ceiling Recessed Model (SRC)

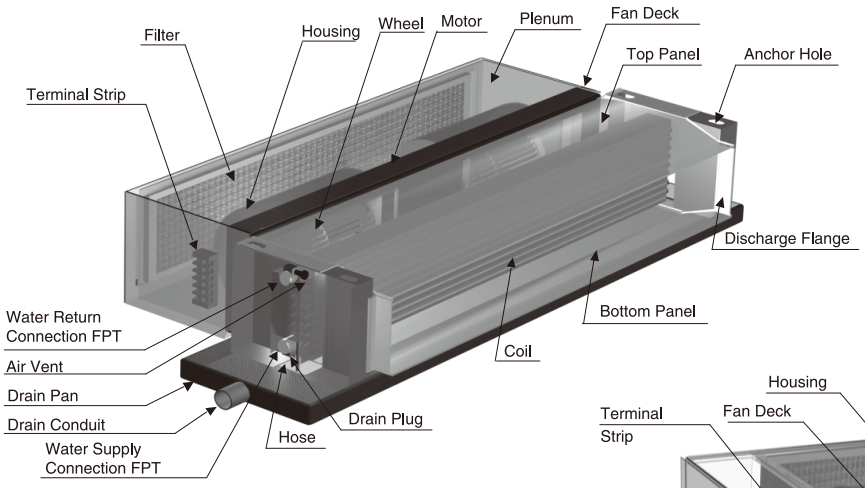

Ceiling Mount Exposed Model (TC)

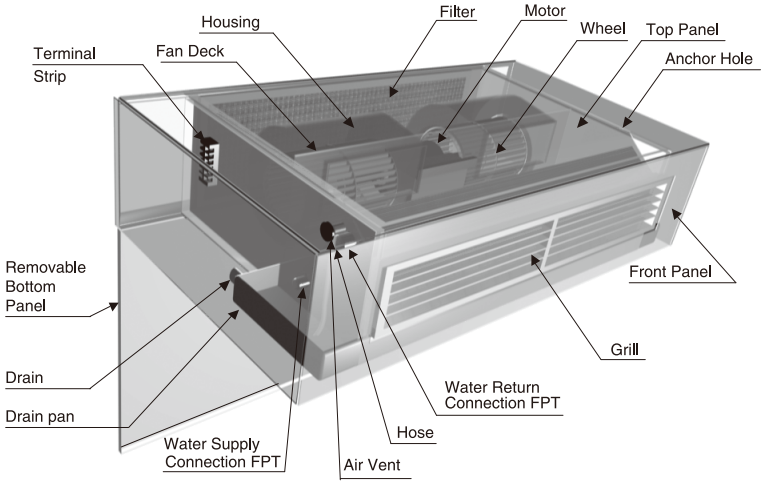

Floor Mount Recessed Model (TFR)

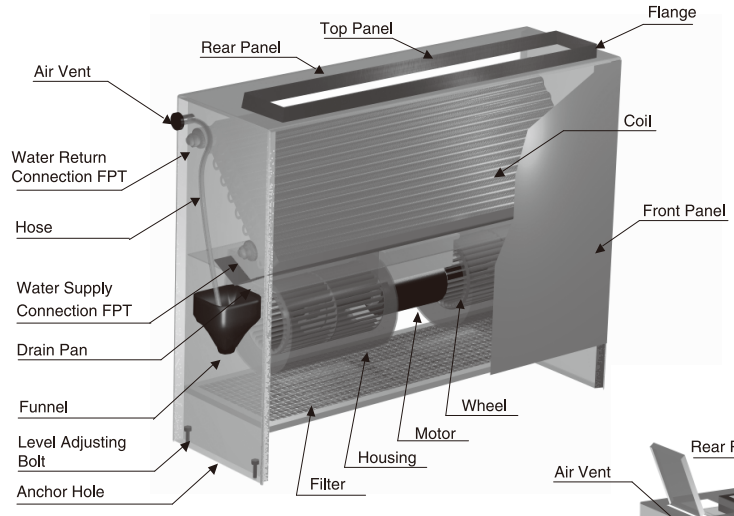

Floor Mount Exposed Model (TF)

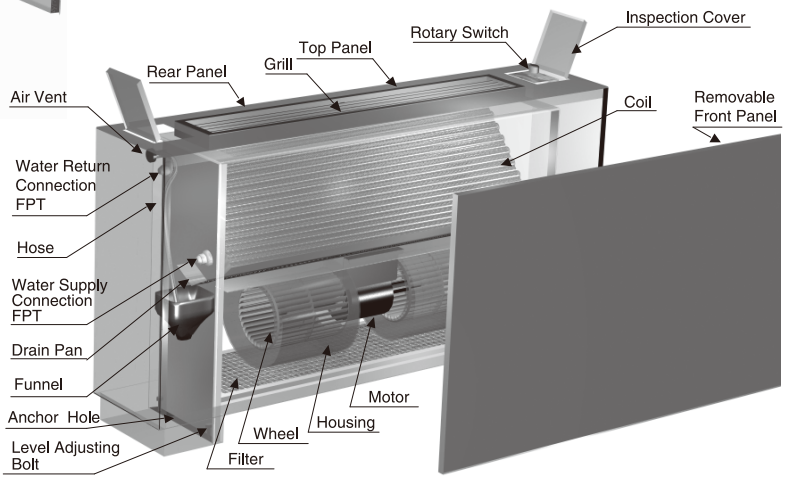

83
84
85

⚠ Installation Guide

Special care must be taken to prevent paint, plaster, insulation or other foreign material from being deposited on the motor, blower wheels or coil. All warrantee are void if foreign material is deposited on the motor or blower wheels of any unit.

1)Hanging

Hang unit tightly with hanger bolts at accurately horizontal level at designated location, as shown by chart.
Adjust unit level by hanger-bolts so that drain will always run towards the drain connection.
Failure to this may cause overflow of drain and drip on ceiling tile at cooling operation.
Connect unit with supply and return air ducts after this level adjustment.

2)Water and Drain Pipe Connection

Water and drain pipe connection should be made to the unit in accordance with local codes and ordinances.
First, screw water pipes or valves into water inlet/outlet sockets of coil and check them to make sure that they are in proper operating position (The coil water supply connection should be that connection on the bottom of the coil).

Note: Make sure that all water and drain pipings are insulated after the connection works to prevent condensation and heat loss, and valves are installed over the drain pan.

FAN COIL UNIT 220V

Lineup Chart

Model SRC ..... 87~101
Model TCRH ..... 102~107
Model TC 108
Model TF 109
Model TFR 110

FAN COIL UNIT Lineup Chart

SRC-2SW-3R

TYPE	POWER SOURCE	MOTOR	COIL	DRAIN PAN	PLENUM	FILTER	MODEL
Ceiling Recessed Model SRC	220V 2	Standard Static (0-50Pa) SW	3-Row Cooling/Heating 3R	With PC Insulation DRC	- Without Plenum	- Without Filter	SRC-0-2SW-3R-DRC -Z -Z
					P Without Insulation	- Without Filter	SRC-0-2SW-3R-DRC -P -Z
						A Aluminum	SRC-0-2SW-3R-DRC -P -A
						N Saran Net	SRC-0-2SW-3R-DRC -P -N
						S Other	SRC-0-2SW-3R-DRC -P -S
					PW With GW Insulation	- Without Filter	SRC-0-2SW-3R-DRC -PW-Z
						A Aluminum	SRC-0-2SW-3R-DRC -PW-A
						N Saran Net	SRC-0-2SW-3R-DRC -PW-N
						S Other	SRC-0-2SW-3R-DRC -PW-S
					PC With PC Insulation	- Without Filter	SRC-0-2SW-3R-DRC -PC-Z
						A Aluminum	SRC-0-2SW-3R-DRC -PC-A
						N Saran Net	SRC-0-2SW-3R-DRC -PC-N
						S Other	SRC-0-2SW-3R-DRC -PC-S
					PE With PE Insulation	- Without Filter	SRC-0-2SW-3R-DRC -PE-Z
						A Aluminum	SRC-0-2SW-3R-DRC -PE-A
						N Saran Net	SRC-0-2SW-3R-DRC -PE-N
						S Other	SRC-0-2SW-3R-DRC -PE-S
				With PC Insulation, 150mm Extended DRC15	- Without Plenum	- Without Filter	SRC-0-2SW-3R-DRC15-Z -Z
					P Without Insulation	- Without Filter	SRC-0-2SW-3R-DRC15-P -Z
						A Aluminum	SRC-0-2SW-3R-DRC15-P -A
						N Saran Net	SRC-0-2SW-3R-DRC15-P -N
						S Other	SRC-0-2SW-3R-DRC15-P -S
					PW With GW Insulation	- Without Filter	SRC-0-2SW-3R-DRC15-PW-Z
						A Aluminum	SRC-0-2SW-3R-DRC15-PW-A
						N Saran Net	SRC-0-2SW-3R-DRC15-PW-N
						S Other	SRC-0-2SW-3R-DRC15-PW-S
					PC With PC Insulation	- Without Filter	SRC-0-2SW-3R-DRC15-PC-Z
						A Aluminum	SRC-0-2SW-3R-DRC15-PC-A
						N Saran Net	SRC-0-2SW-3R-DRC15-PC-N
						S Other	SRC-0-2SW-3R-DRC15-PC-S
					PE With PE Insulation	- Without Filter	SRC-0-2SW-3R-DRC15-PE-Z
						A Aluminum	SRC-0-2SW-3R-DRC15-PE-A
						N Saran Net	SRC-0-2SW-3R-DRC15-PE-N
						S Other	SRC-0-2SW-3R-DRC15-PE-S
				With PC Insulation, 240mm Extended DRC24	- Without Plenum	- Without Filter	SRC-0-2SW-3R-DRC24-Z -Z
					P Without Insulation	- Without Filter	SRC-0-2SW-3R-DRC24-P -Z
						A Aluminum	SRC-0-2SW-3R-DRC24-P -A
						N Saran Net	SRC-0-2SW-3R-DRC24-P -N
						S Other	SRC-0-2SW-3R-DRC24-P -S
					PW With GW Insulation	- Without Filter	SRC-0-2SW-3R-DRC24-PW-Z
						A Aluminum	SRC-0-2SW-3R-DRC24-PW-A
						N Saran Net	SRC-0-2SW-3R-DRC24-PW-N
						S Other	SRC-0-2SW-3R-DRC24-PW-S
					PC With PC Insulation	- Without Filter	SRC-0-2SW-3R-DRC24-PC-Z
						A Aluminum	SRC-0-2SW-3R-DRC24-PC-A
						N Saran Net	SRC-0-2SW-3R-DRC24-PC-N
						S Other	SRC-0-2SW-3R-DRC24-PC-S
					PE With PE Insulation	- Without Filter	SRC-0-2SW-3R-DRC24-PE-Z
						A Aluminum	SRC-0-2SW-3R-DRC24-PE-A
						N Saran Net	SRC-0-2SW-3R-DRC24-PE-N
						S Other	SRC-0-2SW-3R-DRC24-PE-S
				With PE Insulation DRE	- Without Plenum	- Without Filter	SRC-0-2SW-3R-DRE -Z -Z
					P Without Insulation	- Without Filter	SRC-0-2SW-3R-DRE -P -Z
						A Aluminum	SRC-0-2SW-3R-DRE -P -A
						N Saran Net	SRC-0-2SW-3R-DRE -P -N
						S Other	SRC-0-2SW-3R-DRE -P -S
					PW With GW Insulation	- Without Filter	SRC-0-2SW-3R-DRE -PW-Z
						A Aluminum	SRC-0-2SW-3R-DRE -PW-A
						N Saran Net	SRC-0-2SW-3R-DRE -PW-N
						S Other	SRC-0-2SW-3R-DRE -PW-S
					PC With PC Insulation	- Without Filter	SRC-0-2SW-3R-DRE -PC-Z
						A Aluminum	SRC-0-2SW-3R-DRE -PC-A
						N Saran Net	SRC-0-2SW-3R-DRE -PC-N
						S Other	SRC-0-2SW-3R-DRE -PC-S
					PE With PE Insulation	- Without Filter	SRC-0-2SW-3R-DRE -PE-Z
						A Aluminum	SRC-0-2SW-3R-DRE -PE-A
						N Saran Net	SRC-0-2SW-3R-DRE -PE-N
						S Other	SRC-0-2SW-3R-DRE -PE-S
				With PE Insulation, 150mm Extended DRE15	- Without Plenum	- Without Filter	SRC-0-2SW-3R-DRE15-Z -Z
					P Without Insulation	- Without Filter	SRC-0-2SW-3R-DRE15-P -Z
						A Aluminum	SRC-0-2SW-3R-DRE15-P -A
						N Saran Net	SRC-0-2SW-3R-DRE15-P -N
						S Other	SRC-0-2SW-3R-DRE15-P -S
					PW With GW Insulation	- Without Filter	SRC-0-2SW-3R-DRE15-PW-Z
						A Aluminum	SRC-0-2SW-3R-DRE15-PW-A
						N Saran Net	SRC-0-2SW-3R-DRE15-PW-N
						S Other	SRC-0-2SW-3R-DRE15-PW-S
					PC With PC Insulation	- Without Filter	SRC-0-2SW-3R-DRE15-PC-Z
						A Aluminum	SRC-0-2SW-3R-DRE15-PC-A
						N Saran Net	SRC-0-2SW-3R-DRE15-PC-N
						S Other	SRC-0-2SW-3R-DRE15-PC-S
					PE With PE Insulation	- Without Filter	SRC-0-2SW-3R-DRE15-PE-Z
						A Aluminum	SRC-0-2SW-3R-DRE15-PE-A
						N Saran Net	SRC-0-2SW-3R-DRE15-PE-N
						S Other	SRC-0-2SW-3R-DRE15-PE-S
				With PE Insulation, 240mm Extended DRE24	- Without Plenum	- Without Filter	SRC-0-2SW-3R-DRE24-Z -Z
					P Without Insulation	- Without Filter	SRC-0-2SW-3R-DRE24-P -Z
						A Aluminum	SRC-0-2SW-3R-DRE24-P -A
						N Saran Net	SRC-0-2SW-3R-DRE24-P -N
						S Other	SRC-0-2SW-3R-DRE24-P -S
					PW With GW Insulation	- Without Filter	SRC-0-2SW-3R-DRE24-PW-Z
						A Aluminum	SRC-0-2SW-3R-DRE24-PW-A
						N Saran Net	SRC-0-2SW-3R-DRE24-PW-N
						S Other	SRC-0-2SW-3R-DRE24-PW-S
					PC With PC Insulation	- Without Filter	SRC-0-2SW-3R-DRE24-PC-Z
						A Aluminum	SRC-0-2SW-3R-DRE24-PC-A
						N Saran Net	SRC-0-2SW-3R-DRE24-PC-N
						S Other	SRC-0-2SW-3R-DRE24-PC-S
					PE With PE Insulation	- Without Filter	SRC-0-2SW-3R-DRE24-PE-Z
						A Aluminum	SRC-0-2SW-3R-DRE24-PE-A
						N Saran Net	SRC-0-2SW-3R-DRE24-PE-N
						S Other	SRC-0-2SW-3R-DRE24-PE-S

FAN COIL UNIT Lineup Chart

SRC-2SW-4R

TYPE	POWER SOURCE	MOTOR	COIL	DRAIN PAN	PLENUM	FILTER	MODEL
Ceiling Recessed Model SRC	220V 2	Standard Static (0-50Pa) SW	4-Row Cooling/Heating 4R	With PC Insulation DRC	- Without Plenum	- Without Filter	SRC-0-2SW-4R-DRC -Z -Z
					P Without Insulation	- Without Filter	SRC-0-2SW-4R-DRC -P -Z
						A Aluminum	SRC-0-2SW-4R-DRC -P -A
						N Saran Net	SRC-0-2SW-4R-DRC -P -N
						S Other	SRC-0-2SW-4R-DRC -P -S
					PW With GW Insulation	- Without Filter	SRC-0-2SW-4R-DRC -PW-Z
						A Aluminum	SRC-0-2SW-4R-DRC -PW-A
						N Saran Net	SRC-0-2SW-4R-DRC -PW-N
						S Other	SRC-0-2SW-4R-DRC -PW-S
					PC With PC Insulation	- Without Filter	SRC-0-2SW-4R-DRC -PC-Z
						A Aluminum	SRC-0-2SW-4R-DRC -PC-A
						N Saran Net	SRC-0-2SW-4R-DRC -PC-N
						S Other	SRC-0-2SW-4R-DRC -PC-S
					PE With PE Insulation	- Without Filter	SRC-0-2SW-4R-DRC -PE-Z
						A Aluminum	SRC-0-2SW-4R-DRC -PE-A
						N Saran Net	SRC-0-2SW-4R-DRC -PE-N
						S Other	SRC-0-2SW-4R-DRC -PE-S
				With PC Insulation, 150mm Extended DRC15	- Without Plenum	- Without Filter	SRC-0-2SW-4R-DRC15-Z -Z
					P Without Insulation	- Without Filter	SRC-0-2SW-4R-DRC15-P -Z
						A Aluminum	SRC-0-2SW-4R-DRC15-P -A
						N Saran Net	SRC-0-2SW-4R-DRC15-P -N
						S Other	SRC-0-2SW-4R-DRC15-P -S
					PW With GW Insulation	- Without Filter	SRC-0-2SW-4R-DRC15-PW-Z
						A Aluminum	SRC-0-2SW-4R-DRC15-PW-A
						N Saran Net	SRC-0-2SW-4R-DRC15-PW-N
						S Other	SRC-0-2SW-4R-DRC15-PW-S
					PC With PC Insulation	- Without Filter	SRC-0-2SW-4R-DRC15-PC-Z
						A Aluminum	SRC-0-2SW-4R-DRC15-PC-A
						N Saran Net	SRC-0-2SW-4R-DRC15-PC-N
						S Other	SRC-0-2SW-4R-DRC15-PC-S
					PE With PE Insulation	- Without Filter	SRC-0-2SW-4R-DRC15-PE-Z
						A Aluminum	SRC-0-2SW-4R-DRC15-PE-A
						N Saran Net	SRC-0-2SW-4R-DRC15-PE-N
						S Other	SRC-0-2SW-4R-DRC15-PE-S
				With PC Insulation, 240mm Extended DRC24	- Without Plenum	- Without Filter	SRC-0-2SW-4R-DRC24-Z -Z
					P Without Insulation	- Without Filter	SRC-0-2SW-4R-DRC24-P -Z
						A Aluminum	SRC-0-2SW-4R-DRC24-P -A
						N Saran Net	SRC-0-2SW-4R-DRC24-P -N
						S Other	SRC-0-2SW-4R-DRC24-P -S
					PW With GW Insulation	- Without Filter	SRC-0-2SW-4R-DRC24-PW-Z
						A Aluminum	SRC-0-2SW-4R-DRC24-PW-A
						N Saran Net	SRC-0-2SW-4R-DRC24-PW-N
						S Other	SRC-0-2SW-4R-DRC24-PW-S
					PC With PC Insulation	- Without Filter	SRC-0-2SW-4R-DRC24-PC-Z
						A Aluminum	SRC-0-2SW-4R-DRC24-PC-A
						N Saran Net	SRC-0-2SW-4R-DRC24-PC-N
						S Other	SRC-0-2SW-4R-DRC24-PC-S
					PE With PE Insulation	- Without Filter	SRC-0-2SW-4R-DRC24-PE-Z
						A Aluminum	SRC-0-2SW-4R-DRC24-PE-A
						N Saran Net	SRC-0-2SW-4R-DRC24-PE-N
						S Other	SRC-0-2SW-4R-DRC24-PE-S
				With PE Insulation DRE	- Without Plenum	- Without Filter	SRC-0-2SW-4R-DRE -Z -Z
					P Without Insulation	- Without Filter	SRC-0-2SW-4R-DRE -P -Z
						A Aluminum	SRC-0-2SW-4R-DRE -P -A
						N Saran Net	SRC-0-2SW-4R-DRE -P -N
						S Other	SRC-0-2SW-4R-DRE -P -S
					PW With GW Insulation	- Without Filter	SRC-0-2SW-4R-DRE -PW-Z
						A Aluminum	SRC-0-2SW-4R-DRE -PW-A
						N Saran Net	SRC-0-2SW-4R-DRE -PW-N
						S Other	SRC-0-2SW-4R-DRE -PW-S
					PC With PC Insulation	- Without Filter	SRC-0-2SW-4R-DRE -PC-Z
						A Aluminum	SRC-0-2SW-4R-DRE -PC-A
						N Saran Net	SRC-0-2SW-4R-DRE -PC-N
						S Other	SRC-0-2SW-4R-DRE -PC-S
					PE With PE Insulation	- Without Filter	SRC-0-2SW-4R-DRE -PE-Z
						A Aluminum	SRC-0-2SW-4R-DRE -PE-A
						N Saran Net	SRC-0-2SW-4R-DRE -PE-N
						S Other	SRC-0-2SW-4R-DRE -PE-S
				With PE Insulation, 150mm Extended DRE15	- Without Plenum	- Without Filter	SRC-0-2SW-4R-DRE15-Z -Z
					P Without Insulation	- Without Filter	SRC-0-2SW-4R-DRE15-P -Z
						A Aluminum	SRC-0-2SW-4R-DRE15-P -A
						N Saran Net	SRC-0-2SW-4R-DRE15-P -N
						S Other	SRC-0-2SW-4R-DRE15-P -S
					PW With GW Insulation	- Without Filter	SRC-0-2SW-4R-DRE15-PW-Z
						A Aluminum	SRC-0-2SW-4R-DRE15-PW-A
						N Saran Net	SRC-0-2SW-4R-DRE15-PW-N
						S Other	SRC-0-2SW-4R-DRE15-PW-S
					PC With PC Insulation	- Without Filter	SRC-0-2SW-4R-DRE15-PC-Z
						A Aluminum	SRC-0-2SW-4R-DRE15-PC-A
						N Saran Net	SRC-0-2SW-4R-DRE15-PC-N
						S Other	SRC-0-2SW-4R-DRE15-PC-S
					PE With PE Insulation	- Without Filter	SRC-0-2SW-4R-DRE15-PE-Z
						A Aluminum	SRC-0-2SW-4R-DRE15-PE-A
						N Saran Net	SRC-0-2SW-4R-DRE15-PE-N
						S Other	SRC-0-2SW-4R-DRE15-PE-S
				With PE Insulation, 240mm Extended DRE24	- Without Plenum	- Without Filter	SRC-0-2SW-4R-DRE24-Z -Z
					P Without Insulation	- Without Filter	SRC-0-2SW-4R-DRE24-P -Z
						A Aluminum	SRC-0-2SW-4R-DRE24-P -A
						N Saran Net	SRC-0-2SW-4R-DRE24-P -N
						S Other	SRC-0-2SW-4R-DRE24-P -S
					PW With GW Insulation	- Without Filter	SRC-0-2SW-4R-DRE24-PW-Z
						A Aluminum	SRC-0-2SW-4R-DRE24-PW-A
						N Saran Net	SRC-0-2SW-4R-DRE24-PW-N
						S Other	SRC-0-2SW-4R-DRE24-PW-S
					PC With PC Insulation	- Without Filter	SRC-0-2SW-4R-DRE24-PC-Z
						A Aluminum	SRC-0-2SW-4R-DRE24-PC-A
						N Saran Net	SRC-0-2SW-4R-DRE24-PC-N
						S Other	SRC-0-2SW-4R-DRE24-PC-S
					PE With PE Insulation	- Without Filter	SRC-0-2SW-4R-DRE24-PE-Z
						A Aluminum	SRC-0-2SW-4R-DRE24-PE-A
						N Saran Net	SRC-0-2SW-4R-DRE24-PE-N
						S Other	SRC-0-2SW-4R-DRE24-PE-S

◀ 87·88

FAN COIL UNIT Lineup Chart

SRC-2SW-DC1

TYPE	POWER SOURCE	MOTOR	COIL	DRAIN PAN	PLENUM	FILTER	MODEL
Ceiling Recessed Model SRC	220V 2	Standard Static (0-50Pa) SW	2-Row Cooling, 1-Row Heating DC1	With PC Insulation DRC	- Without Plenum	- Without Filter	SRC-0-2SW-DC1-DRC -Z -Z
					P Without Insulation	- Without Filter	SRC-0-2SW-DC1-DRC -P -Z
						A Aluminum	SRC-0-2SW-DC1-DRC -P -A
						N Saran Net	SRC-0-2SW-DC1-DRC -P -N
						S Other	SRC-0-2SW-DC1-DRC -P -S
					PW With GW Insulation	- Without Filter	SRC-0-2SW-DC1-DRC -PW-Z
						A Aluminum	SRC-0-2SW-DC1-DRC -PW-A
						N Saran Net	SRC-0-2SW-DC1-DRC -PW-N
						S Other	SRC-0-2SW-DC1-DRC -PW-S
					PC With PC Insulation	- Without Filter	SRC-0-2SW-DC1-DRC -PC-Z
						A Aluminum	SRC-0-2SW-DC1-DRC -PC-A
						N Saran Net	SRC-0-2SW-DC1-DRC -PC-N
						S Other	SRC-0-2SW-DC1-DRC -PC-S
					PE With PE Insulation	- Without Filter	SRC-0-2SW-DC1-DRC -PE-Z
						A Aluminum	SRC-0-2SW-DC1-DRC -PE-A
						N Saran Net	SRC-0-2SW-DC1-DRC -PE-N
						S Other	SRC-0-2SW-DC1-DRC -PE-S
				With PC Insulation, 150mm Extended DRC15	- Without Plenum	- Without Filter	SRC-0-2SW-DC1-DRC15-Z -Z
					P Without Insulation	- Without Filter	SRC-0-2SW-DC1-DRC15-P -Z
						A Aluminum	SRC-0-2SW-DC1-DRC15-P -A
						N Saran Net	SRC-0-2SW-DC1-DRC15-P -N
						S Other	SRC-0-2SW-DC1-DRC15-P -S
					PW With GW Insulation	- Without Filter	SRC-0-2SW-DC1-DRC15-PW-Z
						A Aluminum	SRC-0-2SW-DC1-DRC15-PW-A
						N Saran Net	SRC-0-2SW-DC1-DRC15-PW-N
						S Other	SRC-0-2SW-DC1-DRC15-PW-S
					PC With PC Insulation	- Without Filter	SRC-0-2SW-DC1-DRC15-PC-Z
						A Aluminum	SRC-0-2SW-DC1-DRC15-PC-A
						N Saran Net	SRC-0-2SW-DC1-DRC15-PC-N
						S Other	SRC-0-2SW-DC1-DRC15-PC-S
					PE With PE Insulation	- Without Filter	SRC-0-2SW-DC1-DRC15-PE-Z
						A Aluminum	SRC-0-2SW-DC1-DRC15-PE-A
						N Saran Net	SRC-0-2SW-DC1-DRC15-PE-N
						S Other	SRC-0-2SW-DC1-DRC15-PE-S
				With PC Insulation, 240mm Extended DRC24	- Without Plenum	- Without Filter	SRC-0-2SW-DC1-DRC24-Z -Z
					P Without Insulation	- Without Filter	SRC-0-2SW-DC1-DRC24-P -Z
						A Aluminum	SRC-0-2SW-DC1-DRC24-P -A
						N Saran Net	SRC-0-2SW-DC1-DRC24-P -N
						S Other	SRC-0-2SW-DC1-DRC24-P -S
					PW With GW Insulation	- Without Filter	SRC-0-2SW-DC1-DRC24-PW-Z
						A Aluminum	SRC-0-2SW-DC1-DRC24-PW-A
						N Saran Net	SRC-0-2SW-DC1-DRC24-PW-N
						S Other	SRC-0-2SW-DC1-DRC24-PW-S
					PC With PC Insulation	- Without Filter	SRC-0-2SW-DC1-DRC24-PC-Z
						A Aluminum	SRC-0-2SW-DC1-DRC24-PC-A
						N Saran Net	SRC-0-2SW-DC1-DRC24-PC-N
						S Other	SRC-0-2SW-DC1-DRC24-PC-S
					PE With PE Insulation	- Without Filter	SRC-0-2SW-DC1-DRC24-PE-Z
						A Aluminum	SRC-0-2SW-DC1-DRC24-PE-A
						N Saran Net	SRC-0-2SW-DC1-DRC24-PE-N
						S Other	SRC-0-2SW-DC1-DRC24-PE-S
				With PE Insulation DRE	- Without Plenum	- Without Filter	SRC-0-2SW-DC1-DRE -Z -Z
					P Without Insulation	- Without Filter	SRC-0-2SW-DC1-DRE -P -Z
						A Aluminum	SRC-0-2SW-DC1-DRE -P -A
						N Saran Net	SRC-0-2SW-DC1-DRE -P -N
						S Other	SRC-0-2SW-DC1-DRE -P -S
					PW With GW Insulation	- Without Filter	SRC-0-2SW-DC1-DRE -PW-Z
						A Aluminum	SRC-0-2SW-DC1-DRE -PW-A
						N Saran Net	SRC-0-2SW-DC1-DRE -PW-N
						S Other	SRC-0-2SW-DC1-DRE -PW-S
					PC With PC Insulation	- Without Filter	SRC-0-2SW-DC1-DRE -PC-Z
						A Aluminum	SRC-0-2SW-DC1-DRE -PC-A
						N Saran Net	SRC-0-2SW-DC1-DRE -PC-N
						S Other	SRC-0-2SW-DC1-DRE -PC-S
					PE With PE Insulation	- Without Filter	SRC-0-2SW-DC1-DRE -PE-Z
						A Aluminum	SRC-0-2SW-DC1-DRE -PE-A
						N Saran Net	SRC-0-2SW-DC1-DRE -PE-N
						S Other	SRC-0-2SW-DC1-DRE -PE-S
				With PE Insulation, 150mm Extended DRE15	- Without Plenum	- Without Filter	SRC-0-2SW-DC1-DRE15-Z -Z
					P Without Insulation	- Without Filter	SRC-0-2SW-DC1-DRE15-P -Z
						A Aluminum	SRC-0-2SW-DC1-DRE15-P -A
						N Saran Net	SRC-0-2SW-DC1-DRE15-P -N
						S Other	SRC-0-2SW-DC1-DRE15-P -S
					PW With GW Insulation	- Without Filter	SRC-0-2SW-DC1-DRE15-PW-Z
						A Aluminum	SRC-0-2SW-DC1-DRE15-PW-A
						N Saran Net	SRC-0-2SW-DC1-DRE15-PW-N
						S Other	SRC-0-2SW-DC1-DRE15-PW-S
					PC With PC Insulation	- Without Filter	SRC-0-2SW-DC1-DRE15-PC-Z
						A Aluminum	SRC-0-2SW-DC1-DRE15-PC-A
						N Saran Net	SRC-0-2SW-DC1-DRE15-PC-N
						S Other	SRC-0-2SW-DC1-DRE15-PC-S
					PE With PE Insulation	- Without Filter	SRC-0-2SW-DC1-DRE15-PE-Z
						A Aluminum	SRC-0-2SW-DC1-DRE15-PE-A
						N Saran Net	SRC-0-2SW-DC1-DRE15-PE-N
						S Other	SRC-0-2SW-DC1-DRE15-PE-S
				With PE Insulation, 240mm Extended DRE24	- Without Plenum	- Without Filter	SRC-0-2SW-DC1-DRE24-Z -Z
					P Without Insulation	- Without Filter	SRC-0-2SW-DC1-DRE24-P -Z
						A Aluminum	SRC-0-2SW-DC1-DRE24-P -A
						N Saran Net	SRC-0-2SW-DC1-DRE24-P -N
						S Other	SRC-0-2SW-DC1-DRE24-P -S
					PW With GW Insulation	- Without Filter	SRC-0-2SW-DC1-DRE24-PW-Z
						A Aluminum	SRC-0-2SW-DC1-DRE24-PW-A
						N Saran Net	SRC-0-2SW-DC1-DRE24-PW-N
						S Other	SRC-0-2SW-DC1-DRE24-PW-S
					PC With PC Insulation	- Without Filter	SRC-0-2SW-DC1-DRE24-PC-Z
						A Aluminum	SRC-0-2SW-DC1-DRE24-PC-A
						N Saran Net	SRC-0-2SW-DC1-DRE24-PC-N
						S Other	SRC-0-2SW-DC1-DRE24-PC-S
					PE With PE Insulation	- Without Filter	SRC-0-2SW-DC1-DRE24-PE-Z
						A Aluminum	SRC-0-2SW-DC1-DRE24-PE-A
						N Saran Net	SRC-0-2SW-DC1-DRE24-PE-N
						S Other	SRC-0-2SW-DC1-DRE24-PE-S

FAN COIL UNIT Lineup Chart

SRC-2SW-DC2

TYPE	POWER SOURCE	MOTOR	COIL	DRAIN PAN	PLENUM	FILTER	MODEL
Ceiling Recessed Model SRC	220V 2	Standard Static (0-50Pa) SW	3-Row Cooling, 1-Row Heating DC2	With PC Insulation DRC	- Without Plenum	- Without Filter	SRC-0-2SW-DC2-DRC -Z -Z
					P Without Insulation	- Without Filter	SRC-0-2SW-DC2-DRC -P -Z
						A Aluminum	SRC-0-2SW-DC2-DRC -P -A
						N Saran Net	SRC-0-2SW-DC2-DRC -P -N
						S Other	SRC-0-2SW-DC2-DRC -P -S
					PW With GW Insulation	- Without Filter	SRC-0-2SW-DC2-DRC -PW-Z
						A Aluminum	SRC-0-2SW-DC2-DRC -PW-A
						N Saran Net	SRC-0-2SW-DC2-DRC -PW-N
						S Other	SRC-0-2SW-DC2-DRC -PW-S
					PC With PC Insulation	- Without Filter	SRC-0-2SW-DC2-DRC -PC-Z
						A Aluminum	SRC-0-2SW-DC2-DRC -PC-A
						N Saran Net	SRC-0-2SW-DC2-DRC -PC-N
						S Other	SRC-0-2SW-DC2-DRC -PC-S
					PE With PE Insulation	- Without Filter	SRC-0-2SW-DC2-DRC -PE-Z
						A Aluminum	SRC-0-2SW-DC2-DRC -PE-A
						N Saran Net	SRC-0-2SW-DC2-DRC -PE-N
						S Other	SRC-0-2SW-DC2-DRC -PE-S
				With PC Insulation, 150mm Extended DRC15	- Without Plenum	- Without Filter	SRC-0-2SW-DC2-DRC15-Z -Z
					P Without Insulation	- Without Filter	SRC-0-2SW-DC2-DRC15-P -Z
						A Aluminum	SRC-0-2SW-DC2-DRC15-P -A
						N Saran Net	SRC-0-2SW-DC2-DRC15-P -N
						S Other	SRC-0-2SW-DC2-DRC15-P -S
					PW With GW Insulation	- Without Filter	SRC-0-2SW-DC2-DRC15-PW-Z
						A Aluminum	SRC-0-2SW-DC2-DRC15-PW-A
						N Saran Net	SRC-0-2SW-DC2-DRC15-PW-N
						S Other	SRC-0-2SW-DC2-DRC15-PW-S
					PC With PC Insulation	- Without Filter	SRC-0-2SW-DC2-DRC15-PC-Z
						A Aluminum	SRC-0-2SW-DC2-DRC15-PC-A
						N Saran Net	SRC-0-2SW-DC2-DRC15-PC-N
						S Other	SRC-0-2SW-DC2-DRC15-PC-S
					PE With PE Insulation	- Without Filter	SRC-0-2SW-DC2-DRC15-PE-Z
						A Aluminum	SRC-0-2SW-DC2-DRC15-PE-A
						N Saran Net	SRC-0-2SW-DC2-DRC15-PE-N
						S Other	SRC-0-2SW-DC2-DRC15-PE-S
				With PC Insulation, 240mm Extended DRC24	- Without Plenum	- Without Filter	SRC-0-2SW-DC2-DRC24-Z -Z
					P Without Insulation	- Without Filter	SRC-0-2SW-DC2-DRC24-P -Z
						A Aluminum	SRC-0-2SW-DC2-DRC24-P -A
						N Saran Net	SRC-0-2SW-DC2-DRC24-P -N
						S Other	SRC-0-2SW-DC2-DRC24-P -S
					PW With GW Insulation	- Without Filter	SRC-0-2SW-DC2-DRC24-PW-Z
						A Aluminum	SRC-0-2SW-DC2-DRC24-PW-A
						N Saran Net	SRC-0-2SW-DC2-DRC24-PW-N
						S Other	SRC-0-2SW-DC2-DRC24-PW-S
					PC With PC Insulation	- Without Filter	SRC-0-2SW-DC2-DRC24-PC-Z
						A Aluminum	SRC-0-2SW-DC2-DRC24-PC-A
						N Saran Net	SRC-0-2SW-DC2-DRC24-PC-N
						S Other	SRC-0-2SW-DC2-DRC24-PC-S
					PE With PE Insulation	- Without Filter	SRC-0-2SW-DC2-DRC24-PE-Z
						A Aluminum	SRC-0-2SW-DC2-DRC24-PE-A
						N Saran Net	SRC-0-2SW-DC2-DRC24-PE-N
						S Other	SRC-0-2SW-DC2-DRC24-PE-S
				With PE Insulation DRE	- Without Plenum	- Without Filter	SRC-0-2SW-DC2-DRE -Z -Z
					P Without Insulation	- Without Filter	SRC-0-2SW-DC2-DRE -P -Z
						A Aluminum	SRC-0-2SW-DC2-DRE -P -A
						N Saran Net	SRC-0-2SW-DC2-DRE -P -N
						S Other	SRC-0-2SW-DC2-DRE -P -S
					PW With GW Insulation	- Without Filter	SRC-0-2SW-DC2-DRE -PW-Z
						A Aluminum	SRC-0-2SW-DC2-DRE -PW-A
						N Saran Net	SRC-0-2SW-DC2-DRE -PW-N
						S Other	SRC-0-2SW-DC2-DRE -PW-S
					PC With PC Insulation	- Without Filter	SRC-0-2SW-DC2-DRE -PC-Z
						A Aluminum	SRC-0-2SW-DC2-DRE -PC-A
						N Saran Net	SRC-0-2SW-DC2-DRE -PC-N
						S Other	SRC-0-2SW-DC2-DRE -PC-S
					PE With PE Insulation	- Without Filter	SRC-0-2SW-DC2-DRE -PE-Z
						A Aluminum	SRC-0-2SW-DC2-DRE -PE-A
						N Saran Net	SRC-0-2SW-DC2-DRE -PE-N
						S Other	SRC-0-2SW-DC2-DRE -PE-S
				With PE Insulation, 150mm Extended DRE15	- Without Plenum	- Without Filter	SRC-0-2SW-DC2-DRE15-Z -Z
					P Without Insulation	- Without Filter	SRC-0-2SW-DC2-DRE15-P -Z
						A Aluminum	SRC-0-2SW-DC2-DRE15-P -A
						N Saran Net	SRC-0-2SW-DC2-DRE15-P -N
						S Other	SRC-0-2SW-DC2-DRE15-P -S
					PW With GW Insulation	- Without Filter	SRC-0-2SW-DC2-DRE15-PW-Z
						A Aluminum	SRC-0-2SW-DC2-DRE15-PW-A
						N Saran Net	SRC-0-2SW-DC2-DRE15-PW-N
						S Other	SRC-0-2SW-DC2-DRE15-PW-S
					PC With PC Insulation	- Without Filter	SRC-0-2SW-DC2-DRE15-PC-Z
						A Aluminum	SRC-0-2SW-DC2-DRE15-PC-A
						N Saran Net	SRC-0-2SW-DC2-DRE15-PC-N
						S Other	SRC-0-2SW-DC2-DRE15-PC-S
					PE With PE Insulation	- Without Filter	SRC-0-2SW-DC2-DRE15-PE-Z
						A Aluminum	SRC-0-2SW-DC2-DRE15-PE-A
						N Saran Net	SRC-0-2SW-DC2-DRE15-PE-N
						S Other	SRC-0-2SW-DC2-DRE15-PE-S
				With PE Insulation, 240mm Extended DRE24	- Without Plenum	- Without Filter	SRC-0-2SW-DC2-DRE24-Z -Z
					P Without Insulation	- Without Filter	SRC-0-2SW-DC2-DRE24-P -Z
						A Aluminum	SRC-0-2SW-DC2-DRE24-P -A
						N Saran Net	SRC-0-2SW-DC2-DRE24-P -N
						S Other	SRC-0-2SW-DC2-DRE24-P -S
					PW With GW Insulation	- Without Filter	SRC-0-2SW-DC2-DRE24-PW-Z
						A Aluminum	SRC-0-2SW-DC2-DRE24-PW-A
						N Saran Net	SRC-0-2SW-DC2-DRE24-PW-N
						S Other	SRC-0-2SW-DC2-DRE24-PW-S
					PC With PC Insulation	- Without Filter	SRC-0-2SW-DC2-DRE24-PC-Z
						A Aluminum	SRC-0-2SW-DC2-DRE24-PC-A
						N Saran Net	SRC-0-2SW-DC2-DRE24-PC-N
						S Other	SRC-0-2SW-DC2-DRE24-PC-S
					PE With PE Insulation	- Without Filter	SRC-0-2SW-DC2-DRE24-PE-Z
						A Aluminum	SRC-0-2SW-DC2-DRE24-PE-A
						N Saran Net	SRC-0-2SW-DC2-DRE24-PE-N
						S Other	SRC-0-2SW-DC2-DRE24-PE-S

◀ 89·90

FAN COIL UNIT Lineup Chart

SRC-2SW-HT

TYPE	POWER SOURCE	MOTOR	COIL	DRAIN PAN	PLENUM	FILTER	MODEL
Ceiling Recessed Model SRC	220V 2	Standard Static (0-50Pa) SW	4-Row, High Temperature Rise HT	With PC Insulation DRC	- Without Plenum	- Without Filter	SRC-0-2SW-HT-DRC -Z -Z
					P Without Insulation	- Without Filter	SRC-0-2SW-HT-DRC -P -Z
						A Aluminum	SRC-0-2SW-HT-DRC -P -A
						N Saran Net	SRC-0-2SW-HT-DRC -P -N
						S Other	SRC-0-2SW-HT-DRC -P -S
					PW With GW Insulation	- Without Filter	SRC-0-2SW-HT-DRC -PW-Z
						A Aluminum	SRC-0-2SW-HT-DRC -PW-A
						N Saran Net	SRC-0-2SW-HT-DRC -PW-N
						S Other	SRC-0-2SW-HT-DRC -PW-S
					PC With PC Insulation	- Without Filter	SRC-0-2SW-HT-DRC -PC-Z
						A Aluminum	SRC-0-2SW-HT-DRC -PC-A
						N Saran Net	SRC-0-2SW-HT-DRC -PC-N
						S Other	SRC-0-2SW-HT-DRC -PC-S
					PE With PE Insulation	- Without Filter	SRC-0-2SW-HT-DRC -PE-Z
						A Aluminum	SRC-0-2SW-HT-DRC -PE-A
						N Saran Net	SRC-0-2SW-HT-DRC -PE-N
						S Other	SRC-0-2SW-HT-DRC -PE-S
				With PC Insulation, 150mm Extended DRC15	- Without Plenum	- Without Filter	SRC-0-2SW-HT-DRC15-Z -Z
					P Without Insulation	- Without Filter	SRC-0-2SW-HT-DRC15-P -Z
						A Aluminum	SRC-0-2SW-HT-DRC15-P -A
						N Saran Net	SRC-0-2SW-HT-DRC15-P -N
						S Other	SRC-0-2SW-HT-DRC15-P -S
					PW With GW Insulation	- Without Filter	SRC-0-2SW-HT-DRC15-PW-Z
						A Aluminum	SRC-0-2SW-HT-DRC15-PW-A
						N Saran Net	SRC-0-2SW-HT-DRC15-PW-N
						S Other	SRC-0-2SW-HT-DRC15-PW-S
					PC With PC Insulation	- Without Filter	SRC-0-2SW-HT-DRC15-PC-Z
						A Aluminum	SRC-0-2SW-HT-DRC15-PC-A
						N Saran Net	SRC-0-2SW-HT-DRC15-PC-N
						S Other	SRC-0-2SW-HT-DRC15-PC-S
					PE With PE Insulation	- Without Filter	SRC-0-2SW-HT-DRC15-PE-Z
						A Aluminum	SRC-0-2SW-HT-DRC15-PE-A
						N Saran Net	SRC-0-2SW-HT-DRC15-PE-N
						S Other	SRC-0-2SW-HT-DRC15-PE-S
				With PC Insulation, 240mm Extended DRC24	- Without Plenum	- Without Filter	SRC-0-2SW-HT-DRC24-Z -Z
					P Without Insulation	- Without Filter	SRC-0-2SW-HT-DRC24-P -Z
						A Aluminum	SRC-0-2SW-HT-DRC24-P -A
						N Saran Net	SRC-0-2SW-HT-DRC24-P -N
						S Other	SRC-0-2SW-HT-DRC24-P -S
					PW With GW Insulation	- Without Filter	SRC-0-2SW-HT-DRC24-PW-Z
						A Aluminum	SRC-0-2SW-HT-DRC24-PW-A
						N Saran Net	SRC-0-2SW-HT-DRC24-PW-N
						S Other	SRC-0-2SW-HT-DRC24-PW-S
					PC With PC Insulation	- Without Filter	SRC-0-2SW-HT-DRC24-PC-Z
						A Aluminum	SRC-0-2SW-HT-DRC24-PC-A
						N Saran Net	SRC-0-2SW-HT-DRC24-PC-N
						S Other	SRC-0-2SW-HT-DRC24-PC-S
					PE With PE Insulation	- Without Filter	SRC-0-2SW-HT-DRC24-PE-Z
						A Aluminum	SRC-0-2SW-HT-DRC24-PE-A
						N Saran Net	SRC-0-2SW-HT-DRC24-PE-N
						S Other	SRC-0-2SW-HT-DRC24-PE-S
				With PE Insulation DRE	- Without Plenum	- Without Filter	SRC-0-2SW-HT-DRE -Z -Z
					P Without Insulation	- Without Filter	SRC-0-2SW-HT-DRE -P -Z
						A Aluminum	SRC-0-2SW-HT-DRE -P -A
						N Saran Net	SRC-0-2SW-HT-DRE -P -N
						S Other	SRC-0-2SW-HT-DRE -P -S
					PW With GW Insulation	- Without Filter	SRC-0-2SW-HT-DRE -PW-Z
						A Aluminum	SRC-0-2SW-HT-DRE -PW-A
						N Saran Net	SRC-0-2SW-HT-DRE -PW-N
						S Other	SRC-0-2SW-HT-DRE -PW-S
					PC With PC Insulation	- Without Filter	SRC-0-2SW-HT-DRE -PC-Z
						A Aluminum	SRC-0-2SW-HT-DRE -PC-A
						N Saran Net	SRC-0-2SW-HT-DRE -PC-N
						S Other	SRC-0-2SW-HT-DRE -PC-S
					PE With PE Insulation	- Without Filter	SRC-0-2SW-HT-DRE -PE-Z
						A Aluminum	SRC-0-2SW-HT-DRE -PE-A
						N Saran Net	SRC-0-2SW-HT-DRE -PE-N
						S Other	SRC-0-2SW-HT-DRE -PE-S
				With PE Insulation, 150mm Extended DRE15	- Without Plenum	- Without Filter	SRC-0-2SW-HT-DRE15-Z -Z
					P Without Insulation	- Without Filter	SRC-0-2SW-HT-DRE15-P -Z
						A Aluminum	SRC-0-2SW-HT-DRE15-P -A
						N Saran Net	SRC-0-2SW-HT-DRE15-P -N
						S Other	SRC-0-2SW-HT-DRE15-P -S
					PW With GW Insulation	- Without Filter	SRC-0-2SW-HT-DRE15-PW-Z
						A Aluminum	SRC-0-2SW-HT-DRE15-PW-A
						N Saran Net	SRC-0-2SW-HT-DRE15-PW-N
						S Other	SRC-0-2SW-HT-DRE15-PW-S
					PC With PC Insulation	- Without Filter	SRC-0-2SW-HT-DRE15-PC-Z
						A Aluminum	SRC-0-2SW-HT-DRE15-PC-A
						N Saran Net	SRC-0-2SW-HT-DRE15-PC-N
						S Other	SRC-0-2SW-HT-DRE15-PC-S
					PE With PE Insulation	- Without Filter	SRC-0-2SW-HT-DRE15-PE-Z
						A Aluminum	SRC-0-2SW-HT-DRE15-PE-A
						N Saran Net	SRC-0-2SW-HT-DRE15-PE-N
						S Other	SRC-0-2SW-HT-DRE15-PE-S
				With PE Insulation, 240mm Extended DRE24	- Without Plenum	- Without Filter	SRC-0-2SW-HT-DRE24-Z -Z
					P Without Insulation	- Without Filter	SRC-0-2SW-HT-DRE24-P -Z
						A Aluminum	SRC-0-2SW-HT-DRE24-P -A
						N Saran Net	SRC-0-2SW-HT-DRE24-P -N
						S Other	SRC-0-2SW-HT-DRE24-P -S
					PW With GW Insulation	- Without Filter	SRC-0-2SW-HT-DRE24-PW-Z
						A Aluminum	SRC-0-2SW-HT-DRE24-PW-A
						N Saran Net	SRC-0-2SW-HT-DRE24-PW-N
						S Other	SRC-0-2SW-HT-DRE24-PW-S
					PC With PC Insulation	- Without Filter	SRC-0-2SW-HT-DRE24-PC-Z
						A Aluminum	SRC-0-2SW-HT-DRE24-PC-A
						N Saran Net	SRC-0-2SW-HT-DRE24-PC-N
						S Other	SRC-0-2SW-HT-DRE24-PC-S
					PE With PE Insulation	- Without Filter	SRC-0-2SW-HT-DRE24-PE-Z
						A Aluminum	SRC-0-2SW-HT-DRE24-PE-A
						N Saran Net	SRC-0-2SW-HT-DRE24-PE-N
						S Other	SRC-0-2SW-HT-DRE24-PE-S

FAN COIL UNIT Lineup Chart

SRC-2HW-3R

TYPE	POWER SOURCE	MOTOR	COIL	DRAIN PAN	PLENUM	FILTER	MODEL
Ceiling Recessed Model SRC	220V 2	High Static (0-100Pa) HW	3-Row Cooling/Heating 3R	With PC Insulation DRC	- Without Plenum	- Without Filter	SRC-0-2HW-3R-DRC -Z -Z
					P Without Insulation	- Without Filter	SRC-0-2HW-3R-DRC -P -Z
						A Aluminum	SRC-0-2HW-3R-DRC -P -A
						N Saran Net	SRC-0-2HW-3R-DRC -P -N
						S Other	SRC-0-2HW-3R-DRC -P -S
					PW With GW Insulation	- Without Filter	SRC-0-2HW-3R-DRC -PW-Z
						A Aluminum	SRC-0-2HW-3R-DRC -PW-A
						N Saran Net	SRC-0-2HW-3R-DRC -PW-N
						S Other	SRC-0-2HW-3R-DRC -PW-S
					PC With PC Insulation	- Without Filter	SRC-0-2HW-3R-DRC -PC-Z
						A Aluminum	SRC-0-2HW-3R-DRC -PC-A
						N Saran Net	SRC-0-2HW-3R-DRC -PC-N
						S Other	SRC-0-2HW-3R-DRC -PC-S
					PE With PE Insulation	- Without Filter	SRC-0-2HW-3R-DRC -PE-Z
						A Aluminum	SRC-0-2HW-3R-DRC -PE-A
						N Saran Net	SRC-0-2HW-3R-DRC -PE-N
						S Other	SRC-0-2HW-3R-DRC -PE-S
				With PC Insulation, 150mm Extended DRC15	- Without Plenum	- Without Filter	SRC-0-2HW-3R-DRC15-Z -Z
					P Without Insulation	- Without Filter	SRC-0-2HW-3R-DRC15-P -Z
						A Aluminum	SRC-0-2HW-3R-DRC15-P -A
						N Saran Net	SRC-0-2HW-3R-DRC15-P -N
						S Other	SRC-0-2HW-3R-DRC15-P -S
					PW With GW Insulation	- Without Filter	SRC-0-2HW-3R-DRC15-PW-Z
						A Aluminum	SRC-0-2HW-3R-DRC15-PW-A
						N Saran Net	SRC-0-2HW-3R-DRC15-PW-N
						S Other	SRC-0-2HW-3R-DRC15-PW-S
					PC With PC Insulation	- Without Filter	SRC-0-2HW-3R-DRC15-PC-Z
						A Aluminum	SRC-0-2HW-3R-DRC15-PC-A
						N Saran Net	SRC-0-2HW-3R-DRC15-PC-N
						S Other	SRC-0-2HW-3R-DRC15-PC-S
					PE With PE Insulation	- Without Filter	SRC-0-2HW-3R-DRC15-PE-Z
						A Aluminum	SRC-0-2HW-3R-DRC15-PE-A
						N Saran Net	SRC-0-2HW-3R-DRC15-PE-N
						S Other	SRC-0-2HW-3R-DRC15-PE-S
				With PC Insulation, 240mm Extended DRC24	- Without Plenum	- Without Filter	SRC-0-2HW-3R-DRC24-Z -Z
					P Without Insulation	- Without Filter	SRC-0-2HW-3R-DRC24-P -Z
						A Aluminum	SRC-0-2HW-3R-DRC24-P -A
						N Saran Net	SRC-0-2HW-3R-DRC24-P -N
						S Other	SRC-0-2HW-3R-DRC24-P -S
					PW With GW Insulation	- Without Filter	SRC-0-2HW-3R-DRC24-PW-Z
						A Aluminum	SRC-0-2HW-3R-DRC24-PW-A
						N Saran Net	SRC-0-2HW-3R-DRC24-PW-N
						S Other	SRC-0-2HW-3R-DRC24-PW-S
					PC With PC Insulation	- Without Filter	SRC-0-2HW-3R-DRC24-PC-Z
						A Aluminum	SRC-0-2HW-3R-DRC24-PC-A
						N Saran Net	SRC-0-2HW-3R-DRC24-PC-N
						S Other	SRC-0-2HW-3R-DRC24-PC-S
					PE With PE Insulation	- Without Filter	SRC-0-2HW-3R-DRC24-PE-Z
						A Aluminum	SRC-0-2HW-3R-DRC24-PE-A
						N Saran Net	SRC-0-2HW-3R-DRC24-PE-N
						S Other	SRC-0-2HW-3R-DRC24-PE-S
				With PE Insulation DRE	- Without Plenum	- Without Filter	SRC-0-2HW-3R-DRE -Z -Z
					P Without Insulation	- Without Filter	SRC-0-2HW-3R-DRE -P -Z
						A Aluminum	SRC-0-2HW-3R-DRE -P -A
						N Saran Net	SRC-0-2HW-3R-DRE -P -N
						S Other	SRC-0-2HW-3R-DRE -P -S
					PW With GW Insulation	- Without Filter	SRC-0-2HW-3R-DRE -PW-Z
						A Aluminum	SRC-0-2HW-3R-DRE -PW-A
						N Saran Net	SRC-0-2HW-3R-DRE -PW-N
						S Other	SRC-0-2HW-3R-DRE -PW-S
					PC With PC Insulation	- Without Filter	SRC-0-2HW-3R-DRE -PC-Z
						A Aluminum	SRC-0-2HW-3R-DRE -PC-A
						N Saran Net	SRC-0-2HW-3R-DRE -PC-N
						S Other	SRC-0-2HW-3R-DRE -PC-S
					PE With PE Insulation	- Without Filter	SRC-0-2HW-3R-DRE -PE-Z
						A Aluminum	SRC-0-2HW-3R-DRE -PE-A
						N Saran Net	SRC-0-2HW-3R-DRE -PE-N
						S Other	SRC-0-2HW-3R-DRE -PE-S
				With PE Insulation, 150mm Extended DRE15	- Without Plenum	- Without Filter	SRC-0-2HW-3R-DRE15-Z -Z
					P Without Insulation	- Without Filter	SRC-0-2HW-3R-DRE15-P -Z
						A Aluminum	SRC-0-2HW-3R-DRE15-P -A
						N Saran Net	SRC-0-2HW-3R-DRE15-P -N
						S Other	SRC-0-2HW-3R-DRE15-P -S
					PW With GW Insulation	- Without Filter	SRC-0-2HW-3R-DRE15-PW-Z
						A Aluminum	SRC-0-2HW-3R-DRE15-PW-A
						N Saran Net	SRC-0-2HW-3R-DRE15-PW-N
						S Other	SRC-0-2HW-3R-DRE15-PW-S
					PC With PC Insulation	- Without Filter	SRC-0-2HW-3R-DRE15-PC-Z
						A Aluminum	SRC-0-2HW-3R-DRE15-PC-A
						N Saran Net	SRC-0-2HW-3R-DRE15-PC-N
						S Other	SRC-0-2HW-3R-DRE15-PC-S
					PE With PE Insulation	- Without Filter	SRC-0-2HW-3R-DRE15-PE-Z
						A Aluminum	SRC-0-2HW-3R-DRE15-PE-A
						N Saran Net	SRC-0-2HW-3R-DRE15-PE-N
						S Other	SRC-0-2HW-3R-DRE15-PE-S
				With PE Insulation, 240mm Extended DRE24	- Without Plenum	- Without Filter	SRC-0-2HW-3R-DRE24-Z -Z
					P Without Insulation	- Without Filter	SRC-0-2HW-3R-DRE24-P -Z
						A Aluminum	SRC-0-2HW-3R-DRE24-P -A
						N Saran Net	SRC-0-2HW-3R-DRE24-P -N
						S Other	SRC-0-2HW-3R-DRE24-P -S
					PW With GW Insulation	- Without Filter	SRC-0-2HW-3R-DRE24-PW-Z
						A Aluminum	SRC-0-2HW-3R-DRE24-PW-A
						N Saran Net	SRC-0-2HW-3R-DRE24-PW-N
						S Other	SRC-0-2HW-3R-DRE24-PW-S
					PC With PC Insulation	- Without Filter	SRC-0-2HW-3R-DRE24-PC-Z
						A Aluminum	SRC-0-2HW-3R-DRE24-PC-A
						N Saran Net	SRC-0-2HW-3R-DRE24-PC-N
						S Other	SRC-0-2HW-3R-DRE24-PC-S
					PE With PE Insulation	- Without Filter	SRC-0-2HW-3R-DRE24-PE-Z
						A Aluminum	SRC-0-2HW-3R-DRE24-PE-A
						N Saran Net	SRC-0-2HW-3R-DRE24-PE-N
						S Other	SRC-0-2HW-3R-DRE24-PE-S

◀ 91·92

FAN COIL UNIT Lineup Chart

SRC-2HW-4R

TYPE	POWER SOURCE	MOTOR	COIL	DRAIN PAN	PLENUM	FILTER	MODEL
Ceiling Recessed Model SRC	220V 2	High Static (0-100Pa) HW	4-Row Cooling/Heating 4R	With PC Insulation DRC	- Without Plenum	- Without Filter	SRC-0-2HW-4R-DRC -Z -Z
					P Without Insulation	- Without Filter	SRC-0-2HW-4R-DRC -P -Z
						A Aluminum	SRC-0-2HW-4R-DRC -P -A
						N Saran Net	SRC-0-2HW-4R-DRC -P -N
						S Other	SRC-0-2HW-4R-DRC -P -S
					PW With GW Insulation	- Without Filter	SRC-0-2HW-4R-DRC -PW-Z
						A Aluminum	SRC-0-2HW-4R-DRC -PW-A
						N Saran Net	SRC-0-2HW-4R-DRC -PW-N
						S Other	SRC-0-2HW-4R-DRC -PW-S
					PC With PC Insulation	- Without Filter	SRC-0-2HW-4R-DRC -PC-Z
						A Aluminum	SRC-0-2HW-4R-DRC -PC-A
						N Saran Net	SRC-0-2HW-4R-DRC -PC-N
						S Other	SRC-0-2HW-4R-DRC -PC-S
					PE With PE Insulation	- Without Filter	SRC-0-2HW-4R-DRC -PE-Z
						A Aluminum	SRC-0-2HW-4R-DRC -PE-A
						N Saran Net	SRC-0-2HW-4R-DRC -PE-N
						S Other	SRC-0-2HW-4R-DRC -PE-S
				With PC Insulation, 150mm Extended DRC15	- Without Plenum	- Without Filter	SRC-0-2HW-4R-DRC15-Z -Z
					P Without Insulation	- Without Filter	SRC-0-2HW-4R-DRC15-P -Z
						A Aluminum	SRC-0-2HW-4R-DRC15-P -A
						N Saran Net	SRC-0-2HW-4R-DRC15-P -N
						S Other	SRC-0-2HW-4R-DRC15-P -S
					PW With GW Insulation	- Without Filter	SRC-0-2HW-4R-DRC15-PW-Z
						A Aluminum	SRC-0-2HW-4R-DRC15-PW-A
						N Saran Net	SRC-0-2HW-4R-DRC15-PW-N
						S Other	SRC-0-2HW-4R-DRC15-PW-S
					PC With PC Insulation	- Without Filter	SRC-0-2HW-4R-DRC15-PC-Z
						A Aluminum	SRC-0-2HW-4R-DRC15-PC-A
						N Saran Net	SRC-0-2HW-4R-DRC15-PC-N
						S Other	SRC-0-2HW-4R-DRC15-PC-S
					PE With PE Insulation	- Without Filter	SRC-0-2HW-4R-DRC15-PE-Z
						A Aluminum	SRC-0-2HW-4R-DRC15-PE-A
						N Saran Net	SRC-0-2HW-4R-DRC15-PE-N
						S Other	SRC-0-2HW-4R-DRC15-PE-S
				With PC Insulation, 240mm Extended DRC24	- Without Plenum	- Without Filter	SRC-0-2HW-4R-DRC24-Z -Z
					P Without Insulation	- Without Filter	SRC-0-2HW-4R-DRC24-P -Z
						A Aluminum	SRC-0-2HW-4R-DRC24-P -A
						N Saran Net	SRC-0-2HW-4R-DRC24-P -N
						S Other	SRC-0-2HW-4R-DRC24-P -S
					PW With GW Insulation	- Without Filter	SRC-0-2HW-4R-DRC24-PW-Z
						A Aluminum	SRC-0-2HW-4R-DRC24-PW-A
						N Saran Net	SRC-0-2HW-4R-DRC24-PW-N
						S Other	SRC-0-2HW-4R-DRC24-PW-S
					PC With PC Insulation	- Without Filter	SRC-0-2HW-4R-DRC24-PC-Z
						A Aluminum	SRC-0-2HW-4R-DRC24-PC-A
						N Saran Net	SRC-0-2HW-4R-DRC24-PC-N
						S Other	SRC-0-2HW-4R-DRC24-PC-S
					PE With PE Insulation	- Without Filter	SRC-0-2HW-4R-DRC24-PE-Z
						A Aluminum	SRC-0-2HW-4R-DRC24-PE-A
						N Saran Net	SRC-0-2HW-4R-DRC24-PE-N
						S Other	SRC-0-2HW-4R-DRC24-PE-S
				With PE Insulation DRE	- Without Plenum	- Without Filter	SRC-0-2HW-4R-DRE -Z -Z
					P Without Insulation	- Without Filter	SRC-0-2HW-4R-DRE -P -Z
						A Aluminum	SRC-0-2HW-4R-DRE -P -A
						N Saran Net	SRC-0-2HW-4R-DRE -P -N
						S Other	SRC-0-2HW-4R-DRE -P -S
					PW With GW Insulation	- Without Filter	SRC-0-2HW-4R-DRE -PW-Z
						A Aluminum	SRC-0-2HW-4R-DRE -PW-A
						N Saran Net	SRC-0-2HW-4R-DRE -PW-N
						S Other	SRC-0-2HW-4R-DRE -PW-S
					PC With PC Insulation	- Without Filter	SRC-0-2HW-4R-DRE -PC-Z
						A Aluminum	SRC-0-2HW-4R-DRE -PC-A
						N Saran Net	SRC-0-2HW-4R-DRE -PC-N
						S Other	SRC-0-2HW-4R-DRE -PC-S
					PE With PE Insulation	- Without Filter	SRC-0-2HW-4R-DRE -PE-Z
						A Aluminum	SRC-0-2HW-4R-DRE -PE-A
						N Saran Net	SRC-0-2HW-4R-DRE -PE-N
						S Other	SRC-0-2HW-4R-DRE -PE-S
				With PE Insulation, 150mm Extended DRE15	- Without Plenum	- Without Filter	SRC-0-2HW-4R-DRE15-Z -Z
					P Without Insulation	- Without Filter	SRC-0-2HW-4R-DRE15-P -Z
						A Aluminum	SRC-0-2HW-4R-DRE15-P -A
						N Saran Net	SRC-0-2HW-4R-DRE15-P -N
						S Other	SRC-0-2HW-4R-DRE15-P -S
					PW With GW Insulation	- Without Filter	SRC-0-2HW-4R-DRE15-PW-Z
						A Aluminum	SRC-0-2HW-4R-DRE15-PW-A
						N Saran Net	SRC-0-2HW-4R-DRE15-PW-N
						S Other	SRC-0-2HW-4R-DRE15-PW-S
					PC With PC Insulation	- Without Filter	SRC-0-2HW-4R-DRE15-PC-Z
						A Aluminum	SRC-0-2HW-4R-DRE15-PC-A
						N Saran Net	SRC-0-2HW-4R-DRE15-PC-N
						S Other	SRC-0-2HW-4R-DRE15-PC-S
					PE With PE Insulation	- Without Filter	SRC-0-2HW-4R-DRE15-PE-Z
						A Aluminum	SRC-0-2HW-4R-DRE15-PE-A
						N Saran Net	SRC-0-2HW-4R-DRE15-PE-N
						S Other	SRC-0-2HW-4R-DRE15-PE-S
				With PE Insulation, 240mm Extended DRE24	- Without Plenum	- Without Filter	SRC-0-2HW-4R-DRE24-Z -Z
					P Without Insulation	- Without Filter	SRC-0-2HW-4R-DRE24-P -Z
						A Aluminum	SRC-0-2HW-4R-DRE24-P -A
						N Saran Net	SRC-0-2HW-4R-DRE24-P -N
						S Other	SRC-0-2HW-4R-DRE24-P -S
					PW With GW Insulation	- Without Filter	SRC-0-2HW-4R-DRE24-PW-Z
						A Aluminum	SRC-0-2HW-4R-DRE24-PW-A
						N Saran Net	SRC-0-2HW-4R-DRE24-PW-N
						S Other	SRC-0-2HW-4R-DRE24-PW-S
					PC With PC Insulation	- Without Filter	SRC-0-2HW-4R-DRE24-PC-Z
						A Aluminum	SRC-0-2HW-4R-DRE24-PC-A
						N Saran Net	SRC-0-2HW-4R-DRE24-PC-N
						S Other	SRC-0-2HW-4R-DRE24-PC-S
					PE With PE Insulation	- Without Filter	SRC-0-2HW-4R-DRE24-PE-Z
						A Aluminum	SRC-0-2HW-4R-DRE24-PE-A
						N Saran Net	SRC-0-2HW-4R-DRE24-PE-N
						S Other	SRC-0-2HW-4R-DRE24-PE-S

FAN COIL UNIT Lineup Chart

SRC-2HW-DC1

TYPE	POWER SOURCE	MOTOR	COIL	DRAIN PAN	PLENUM	FILTER	MODEL
Ceiling Recessed Model SRC	220V 2	High Static (0-100Pa) HW	2-Row Cooling, 1-Row Heating DC1	With PC Insulation DRC	- Without Plenum	- Without Filter	SRC-0-2HW-DC1-DRC -Z -Z
					P Without Insulation	- Without Filter	SRC-0-2HW-DC1-DRC -P -Z
						A Aluminum	SRC-0-2HW-DC1-DRC -P -A
						N Saran Net	SRC-0-2HW-DC1-DRC -P -N
						S Other	SRC-0-2HW-DC1-DRC -P -S
					PW With GW Insulation	- Without Filter	SRC-0-2HW-DC1-DRC -PW-Z
						A Aluminum	SRC-0-2HW-DC1-DRC -PW-A
						N Saran Net	SRC-0-2HW-DC1-DRC -PW-N
						S Other	SRC-0-2HW-DC1-DRC -PW-S
					PC With PC Insulation	- Without Filter	SRC-0-2HW-DC1-DRC -PC-Z
						A Aluminum	SRC-0-2HW-DC1-DRC -PC-A
						N Saran Net	SRC-0-2HW-DC1-DRC -PC-N
						S Other	SRC-0-2HW-DC1-DRC -PC-S
					PE With PE Insulation	- Without Filter	SRC-0-2HW-DC1-DRC -PE-Z
						A Aluminum	SRC-0-2HW-DC1-DRC -PE-A
						N Saran Net	SRC-0-2HW-DC1-DRC -PE-N
						S Other	SRC-0-2HW-DC1-DRC -PE-S
				With PC Insulation, 150mm Extended DRC15	- Without Plenum	- Without Filter	SRC-0-2HW-DC1-DRC15-Z -Z
					P Without Insulation	- Without Filter	SRC-0-2HW-DC1-DRC15-P -Z
						A Aluminum	SRC-0-2HW-DC1-DRC15-P -A
						N Saran Net	SRC-0-2HW-DC1-DRC15-P -N
						S Other	SRC-0-2HW-DC1-DRC15-P -S
					PW With GW Insulation	- Without Filter	SRC-0-2HW-DC1-DRC15-PW-Z
						A Aluminum	SRC-0-2HW-DC1-DRC15-PW-A
						N Saran Net	SRC-0-2HW-DC1-DRC15-PW-N
						S Other	SRC-0-2HW-DC1-DRC15-PW-S
					PC With PC Insulation	- Without Filter	SRC-0-2HW-DC1-DRC15-PC-Z
						A Aluminum	SRC-0-2HW-DC1-DRC15-PC-A
						N Saran Net	SRC-0-2HW-DC1-DRC15-PC-N
						S Other	SRC-0-2HW-DC1-DRC15-PC-S
					PE With PE Insulation	- Without Filter	SRC-0-2HW-DC1-DRC15-PE-Z
						A Aluminum	SRC-0-2HW-DC1-DRC15-PE-A
						N Saran Net	SRC-0-2HW-DC1-DRC15-PE-N
						S Other	SRC-0-2HW-DC1-DRC15-PE-S
				With PC Insulation, 240mm Extended DRC24	- Without Plenum	- Without Filter	SRC-0-2HW-DC1-DRC24-Z -Z
					P Without Insulation	- Without Filter	SRC-0-2HW-DC1-DRC24-P -Z
						A Aluminum	SRC-0-2HW-DC1-DRC24-P -A
						N Saran Net	SRC-0-2HW-DC1-DRC24-P -N
						S Other	SRC-0-2HW-DC1-DRC24-P -S
					PW With GW Insulation	- Without Filter	SRC-0-2HW-DC1-DRC24-PW-Z
						A Aluminum	SRC-0-2HW-DC1-DRC24-PW-A
						N Saran Net	SRC-0-2HW-DC1-DRC24-PW-N
						S Other	SRC-0-2HW-DC1-DRC24-PW-S
					PC With PC Insulation	- Without Filter	SRC-0-2HW-DC1-DRC24-PC-Z
						A Aluminum	SRC-0-2HW-DC1-DRC24-PC-A
						N Saran Net	SRC-0-2HW-DC1-DRC24-PC-N
						S Other	SRC-0-2HW-DC1-DRC24-PC-S
					PE With PE Insulation	- Without Filter	SRC-0-2HW-DC1-DRC24-PE-Z
						A Aluminum	SRC-0-2HW-DC1-DRC24-PE-A
						N Saran Net	SRC-0-2HW-DC1-DRC24-PE-N
						S Other	SRC-0-2HW-DC1-DRC24-PE-S
				With PE Insulation DRE	- Without Plenum	- Without Filter	SRC-0-2HW-DC1-DRE -Z -Z
					P Without Insulation	- Without Filter	SRC-0-2HW-DC1-DRE -P -Z
						A Aluminum	SRC-0-2HW-DC1-DRE -P -A
						N Saran Net	SRC-0-2HW-DC1-DRE -P -N
						S Other	SRC-0-2HW-DC1-DRE -P -S
					PW With GW Insulation	- Without Filter	SRC-0-2HW-DC1-DRE -PW-Z
						A Aluminum	SRC-0-2HW-DC1-DRE -PW-A
						N Saran Net	SRC-0-2HW-DC1-DRE -PW-N
						S Other	SRC-0-2HW-DC1-DRE -PW-S
					PC With PC Insulation	- Without Filter	SRC-0-2HW-DC1-DRE -PC-Z
						A Aluminum	SRC-0-2HW-DC1-DRE -PC-A
						N Saran Net	SRC-0-2HW-DC1-DRE -PC-N
						S Other	SRC-0-2HW-DC1-DRE -PC-S
					PE With PE Insulation	- Without Filter	SRC-0-2HW-DC1-DRE -PE-Z
						A Aluminum	SRC-0-2HW-DC1-DRE -PE-A
						N Saran Net	SRC-0-2HW-DC1-DRE -PE-N
						S Other	SRC-0-2HW-DC1-DRE -PE-S
				With PE Insulation, 150mm Extended DRE15	- Without Plenum	- Without Filter	SRC-0-2HW-DC1-DRE15-Z -Z
					P Without Insulation	- Without Filter	SRC-0-2HW-DC1-DRE15-P -Z
						A Aluminum	SRC-0-2HW-DC1-DRE15-P -A
						N Saran Net	SRC-0-2HW-DC1-DRE15-P -N
						S Other	SRC-0-2HW-DC1-DRE15-P -S
					PW With GW Insulation	- Without Filter	SRC-0-2HW-DC1-DRE15-PW-Z
						A Aluminum	SRC-0-2HW-DC1-DRE15-PW-A
						N Saran Net	SRC-0-2HW-DC1-DRE15-PW-N
						S Other	SRC-0-2HW-DC1-DRE15-PW-S
					PC With PC Insulation	- Without Filter	SRC-0-2HW-DC1-DRE15-PC-Z
						A Aluminum	SRC-0-2HW-DC1-DRE15-PC-A
						N Saran Net	SRC-0-2HW-DC1-DRE15-PC-N
						S Other	SRC-0-2HW-DC1-DRE15-PC-S
					PE With PE Insulation	- Without Filter	SRC-0-2HW-DC1-DRE15-PE-Z
						A Aluminum	SRC-0-2HW-DC1-DRE15-PE-A
						N Saran Net	SRC-0-2HW-DC1-DRE15-PE-N
						S Other	SRC-0-2HW-DC1-DRE15-PE-S
				With PE Insulation, 240mm Extended DRE24	- Without Plenum	- Without Filter	SRC-0-2HW-DC1-DRE24-Z -Z
					P Without Insulation	- Without Filter	SRC-0-2HW-DC1-DRE24-P -Z
						A Aluminum	SRC-0-2HW-DC1-DRE24-P -A
						N Saran Net	SRC-0-2HW-DC1-DRE24-P -N
						S Other	SRC-0-2HW-DC1-DRE24-P -S
					PW With GW Insulation	- Without Filter	SRC-0-2HW-DC1-DRE24-PW-Z
						A Aluminum	SRC-0-2HW-DC1-DRE24-PW-A
						N Saran Net	SRC-0-2HW-DC1-DRE24-PW-N
						S Other	SRC-0-2HW-DC1-DRE24-PW-S
					PC With PC Insulation	- Without Filter	SRC-0-2HW-DC1-DRE24-PC-Z
						A Aluminum	SRC-0-2HW-DC1-DRE24-PC-A
						N Saran Net	SRC-0-2HW-DC1-DRE24-PC-N
						S Other	SRC-0-2HW-DC1-DRE24-PC-S
					PE With PE Insulation	- Without Filter	SRC-0-2HW-DC1-DRE24-PE-Z
						A Aluminum	SRC-0-2HW-DC1-DRE24-PE-A
						N Saran Net	SRC-0-2HW-DC1-DRE24-PE-N
						S Other	SRC-0-2HW-DC1-DRE24-PE-S

◀ 93·94

FAN COIL UNIT Lineup Chart

SRC-2HW-DC2

TYPE	POWER SOURCE	MOTOR	COIL	DRAIN PAN	PLENUM	FILTER	MODEL
Ceiling Recessed Model SRC	220V 2	High Static (0-100Pa) HW	3-Row Cooling, 1-Row Heating DC2	With PC Insulation DRC	- Without Plenum	- Without Filter	SRC-0-2HW-DC2-DRC -Z -Z
					P Without Insulation	- Without Filter	SRC-0-2HW-DC2-DRC -P -Z
						A Aluminum	SRC-0-2HW-DC2-DRC -P -A
						N Saran Net	SRC-0-2HW-DC2-DRC -P -N
						S Other	SRC-0-2HW-DC2-DRC -P -S
					PW With GW Insulation	- Without Filter	SRC-0-2HW-DC2-DRC -PW-Z
						A Aluminum	SRC-0-2HW-DC2-DRC -PW-A
						N Saran Net	SRC-0-2HW-DC2-DRC -PW-N
						S Other	SRC-0-2HW-DC2-DRC -PW-S
					PC With PC Insulation	- Without Filter	SRC-0-2HW-DC2-DRC -PC-Z
						A Aluminum	SRC-0-2HW-DC2-DRC -PC-A
						N Saran Net	SRC-0-2HW-DC2-DRC -PC-N
						S Other	SRC-0-2HW-DC2-DRC -PC-S
					PE With PE Insulation	- Without Filter	SRC-0-2HW-DC2-DRC -PE-Z
						A Aluminum	SRC-0-2HW-DC2-DRC -PE-A
						N Saran Net	SRC-0-2HW-DC2-DRC -PE-N
						S Other	SRC-0-2HW-DC2-DRC -PE-S
				With PC Insulation, 150mm Extended DRC15	- Without Plenum	- Without Filter	SRC-0-2HW-DC2-DRC15-Z -Z
					P Without Insulation	- Without Filter	SRC-0-2HW-DC2-DRC15-P -Z
						A Aluminum	SRC-0-2HW-DC2-DRC15-P -A
						N Saran Net	SRC-0-2HW-DC2-DRC15-P -N
						S Other	SRC-0-2HW-DC2-DRC15-P -S
					PW With GW Insulation	- Without Filter	SRC-0-2HW-DC2-DRC15-PW-Z
						A Aluminum	SRC-0-2HW-DC2-DRC15-PW-A
						N Saran Net	SRC-0-2HW-DC2-DRC15-PW-N
						S Other	SRC-0-2HW-DC2-DRC15-PW-S
					PC With PC Insulation	- Without Filter	SRC-0-2HW-DC2-DRC15-PC-Z
						A Aluminum	SRC-0-2HW-DC2-DRC15-PC-A
						N Saran Net	SRC-0-2HW-DC2-DRC15-PC-N
						S Other	SRC-0-2HW-DC2-DRC15-PC-S
					PE With PE Insulation	- Without Filter	SRC-0-2HW-DC2-DRC15-PE-Z
						A Aluminum	SRC-0-2HW-DC2-DRC15-PE-A
						N Saran Net	SRC-0-2HW-DC2-DRC15-PE-N
						S Other	SRC-0-2HW-DC2-DRC15-PE-S
				With PC Insulation, 240mm Extended DRC24	- Without Plenum	- Without Filter	SRC-0-2HW-DC2-DRC24-Z -Z
					P Without Insulation	- Without Filter	SRC-0-2HW-DC2-DRC24-P -Z
						A Aluminum	SRC-0-2HW-DC2-DRC24-P -A
						N Saran Net	SRC-0-2HW-DC2-DRC24-P -N
						S Other	SRC-0-2HW-DC2-DRC24-P -S
					PW With GW Insulation	- Without Filter	SRC-0-2HW-DC2-DRC24-PW-Z
						A Aluminum	SRC-0-2HW-DC2-DRC24-PW-A
						N Saran Net	SRC-0-2HW-DC2-DRC24-PW-N
						S Other	SRC-0-2HW-DC2-DRC24-PW-S
					PC With PC Insulation	- Without Filter	SRC-0-2HW-DC2-DRC24-PC-Z
						A Aluminum	SRC-0-2HW-DC2-DRC24-PC-A
						N Saran Net	SRC-0-2HW-DC2-DRC24-PC-N
						S Other	SRC-0-2HW-DC2-DRC24-PC-S
					PE With PE Insulation	- Without Filter	SRC-0-2HW-DC2-DRC24-PE-Z
						A Aluminum	SRC-0-2HW-DC2-DRC24-PE-A
						N Saran Net	SRC-0-2HW-DC2-DRC24-PE-N
						S Other	SRC-0-2HW-DC2-DRC24-PE-S
				With PE Insulation DRE	- Without Plenum	- Without Filter	SRC-0-2HW-DC2-DRE -Z -Z
					P Without Insulation	- Without Filter	SRC-0-2HW-DC2-DRE -P -Z
						A Aluminum	SRC-0-2HW-DC2-DRE -P -A
						N Saran Net	SRC-0-2HW-DC2-DRE -P -N
						S Other	SRC-0-2HW-DC2-DRE -P -S
					PW With GW Insulation	- Without Filter	SRC-0-2HW-DC2-DRE -PW-Z
						A Aluminum	SRC-0-2HW-DC2-DRE -PW-A
						N Saran Net	SRC-0-2HW-DC2-DRE -PW-N
						S Other	SRC-0-2HW-DC2-DRE -PW-S
					PC With PC Insulation	- Without Filter	SRC-0-2HW-DC2-DRE -PC-Z
						A Aluminum	SRC-0-2HW-DC2-DRE -PC-A
						N Saran Net	SRC-0-2HW-DC2-DRE -PC-N
						S Other	SRC-0-2HW-DC2-DRE -PC-S
					PE With PE Insulation	- Without Filter	SRC-0-2HW-DC2-DRE -PE-Z
						A Aluminum	SRC-0-2HW-DC2-DRE -PE-A
						N Saran Net	SRC-0-2HW-DC2-DRE -PE-N
						S Other	SRC-0-2HW-DC2-DRE -PE-S
				With PE Insulation, 150mm Extended DRE15	- Without Plenum	- Without Filter	SRC-0-2HW-DC2-DRE15-Z -Z
					P Without Insulation	- Without Filter	SRC-0-2HW-DC2-DRE15-P -Z
						A Aluminum	SRC-0-2HW-DC2-DRE15-P -A
						N Saran Net	SRC-0-2HW-DC2-DRE15-P -N
						S Other	SRC-0-2HW-DC2-DRE15-P -S
					PW With GW Insulation	- Without Filter	SRC-0-2HW-DC2-DRE15-PW-Z
						A Aluminum	SRC-0-2HW-DC2-DRE15-PW-A
						N Saran Net	SRC-0-2HW-DC2-DRE15-PW-N
						S Other	SRC-0-2HW-DC2-DRE15-PW-S
					PC With PC Insulation	- Without Filter	SRC-0-2HW-DC2-DRE15-PC-Z
						A Aluminum	SRC-0-2HW-DC2-DRE15-PC-A
						N Saran Net	SRC-0-2HW-DC2-DRE15-PC-N
						S Other	SRC-0-2HW-DC2-DRE15-PC-S
					PE With PE Insulation	- Without Filter	SRC-0-2HW-DC2-DRE15-PE-Z
						A Aluminum	SRC-0-2HW-DC2-DRE15-PE-A
						N Saran Net	SRC-0-2HW-DC2-DRE15-PE-N
						S Other	SRC-0-2HW-DC2-DRE15-PE-S
				With PE Insulation, 240mm Extended DRE24	- Without Plenum	- Without Filter	SRC-0-2HW-DC2-DRE24-Z -Z
					P Without Insulation	- Without Filter	SRC-0-2HW-DC2-DRE24-P -Z
						A Aluminum	SRC-0-2HW-DC2-DRE24-P -A
						N Saran Net	SRC-0-2HW-DC2-DRE24-P -N
						S Other	SRC-0-2HW-DC2-DRE24-P -S
					PW With GW Insulation	- Without Filter	SRC-0-2HW-DC2-DRE24-PW-Z
						A Aluminum	SRC-0-2HW-DC2-DRE24-PW-A
						N Saran Net	SRC-0-2HW-DC2-DRE24-PW-N
						S Other	SRC-0-2HW-DC2-DRE24-PW-S
					PC With PC Insulation	- Without Filter	SRC-0-2HW-DC2-DRE24-PC-Z
						A Aluminum	SRC-0-2HW-DC2-DRE24-PC-A
						N Saran Net	SRC-0-2HW-DC2-DRE24-PC-N
						S Other	SRC-0-2HW-DC2-DRE24-PC-S
					PE With PE Insulation	- Without Filter	SRC-0-2HW-DC2-DRE24-PE-Z
						A Aluminum	SRC-0-2HW-DC2-DRE24-PE-A
						N Saran Net	SRC-0-2HW-DC2-DRE24-PE-N
						S Other	SRC-0-2HW-DC2-DRE24-PE-S

FAN COIL UNIT Lineup Chart

SRC-2HW-HT

TYPE	POWER SOURCE	MOTOR	COIL	DRAIN PAN	PLENUM	FILTER	MODEL
Ceiling Recessed Model SRC	220V 2	High Static (0-100Pa) HW	4-Row, High Temperature Rise HT	With PC Insulation DRC	- Without Plenum	- Without Filter	SRC-0-2HW-HT-DRC -Z -Z
					P Without Insulation	- Without Filter	SRC-0-2HW-HT-DRC -P -Z
						A Aluminum	SRC-0-2HW-HT-DRC -P -A
						N Saran Net	SRC-0-2HW-HT-DRC -P -N
						S Other	SRC-0-2HW-HT-DRC -P -S
					PW With GW Insulation	- Without Filter	SRC-0-2HW-HT-DRC -PW-Z
						A Aluminum	SRC-0-2HW-HT-DRC -PW-A
						N Saran Net	SRC-0-2HW-HT-DRC -PW-N
						S Other	SRC-0-2HW-HT-DRC -PW-S
					PC With PC Insulation	- Without Filter	SRC-0-2HW-HT-DRC -PC-Z
						A Aluminum	SRC-0-2HW-HT-DRC -PC-A
						N Saran Net	SRC-0-2HW-HT-DRC -PC-N
						S Other	SRC-0-2HW-HT-DRC -PC-S
					PE With PE Insulation	- Without Filter	SRC-0-2HW-HT-DRC -PE-Z
						A Aluminum	SRC-0-2HW-HT-DRC -PE-A
						N Saran Net	SRC-0-2HW-HT-DRC -PE-N
						S Other	SRC-0-2HW-HT-DRC -PE-S
				With PC Insulation, 150mm Extended DRC15	- Without Plenum	- Without Filter	SRC-0-2HW-HT-DRC15-Z -Z
					P Without Insulation	- Without Filter	SRC-0-2HW-HT-DRC15-P -Z
						A Aluminum	SRC-0-2HW-HT-DRC15-P -A
						N Saran Net	SRC-0-2HW-HT-DRC15-P -N
						S Other	SRC-0-2HW-HT-DRC15-P -S
					PW With GW Insulation	- Without Filter	SRC-0-2HW-HT-DRC15-PW-Z
						A Aluminum	SRC-0-2HW-HT-DRC15-PW-A
						N Saran Net	SRC-0-2HW-HT-DRC15-PW-N
						S Other	SRC-0-2HW-HT-DRC15-PW-S
					PC With PC Insulation	- Without Filter	SRC-0-2HW-HT-DRC15-PC-Z
						A Aluminum	SRC-0-2HW-HT-DRC15-PC-A
						N Saran Net	SRC-0-2HW-HT-DRC15-PC-N
						S Other	SRC-0-2HW-HT-DRC15-PC-S
					PE With PE Insulation	- Without Filter	SRC-0-2HW-HT-DRC15-PE-Z
						A Aluminum	SRC-0-2HW-HT-DRC15-PE-A
						N Saran Net	SRC-0-2HW-HT-DRC15-PE-N
						S Other	SRC-0-2HW-HT-DRC15-PE-S
				With PC Insulation, 240mm Extended DRC24	- Without Plenum	- Without Filter	SRC-0-2HW-HT-DRC24-Z -Z
					P Without Insulation	- Without Filter	SRC-0-2HW-HT-DRC24-P -Z
						A Aluminum	SRC-0-2HW-HT-DRC24-P -A
						N Saran Net	SRC-0-2HW-HT-DRC24-P -N
						S Other	SRC-0-2HW-HT-DRC24-P -S
					PW With GW Insulation	- Without Filter	SRC-0-2HW-HT-DRC24-PW-Z
						A Aluminum	SRC-0-2HW-HT-DRC24-PW-A
						N Saran Net	SRC-0-2HW-HT-DRC24-PW-N
						S Other	SRC-0-2HW-HT-DRC24-PW-S
					PC With PC Insulation	- Without Filter	SRC-0-2HW-HT-DRC24-PC-Z
						A Aluminum	SRC-0-2HW-HT-DRC24-PC-A
						N Saran Net	SRC-0-2HW-HT-DRC24-PC-N
						S Other	SRC-0-2HW-HT-DRC24-PC-S
					PE With PE Insulation	- Without Filter	SRC-0-2HW-HT-DRC24-PE-Z
						A Aluminum	SRC-0-2HW-HT-DRC24-PE-A
						N Saran Net	SRC-0-2HW-HT-DRC24-PE-N
						S Other	SRC-0-2HW-HT-DRC24-PE-S
				With PE Insulation DRE	- Without Plenum	- Without Filter	SRC-0-2HW-HT-DRE -Z -Z
					P Without Insulation	- Without Filter	SRC-0-2HW-HT-DRE -P -Z
						A Aluminum	SRC-0-2HW-HT-DRE -P -A
						N Saran Net	SRC-0-2HW-HT-DRE -P -N
						S Other	SRC-0-2HW-HT-DRE -P -S
					PW With GW Insulation	- Without Filter	SRC-0-2HW-HT-DRE -PW-Z
						A Aluminum	SRC-0-2HW-HT-DRE -PW-A
						N Saran Net	SRC-0-2HW-HT-DRE -PW-N
						S Other	SRC-0-2HW-HT-DRE -PW-S
					PC With PC Insulation	- Without Filter	SRC-0-2HW-HT-DRE -PC-Z
						A Aluminum	SRC-0-2HW-HT-DRE -PC-A
						N Saran Net	SRC-0-2HW-HT-DRE -PC-N
						S Other	SRC-0-2HW-HT-DRE -PC-S
					PE With PE Insulation	- Without Filter	SRC-0-2HW-HT-DRE -PE-Z
						A Aluminum	SRC-0-2HW-HT-DRE -PE-A
						N Saran Net	SRC-0-2HW-HT-DRE -PE-N
						S Other	SRC-0-2HW-HT-DRE -PE-S
				With PE Insulation, 150mm Extended DRE15	- Without Plenum	- Without Filter	SRC-0-2HW-HT-DRE15-Z -Z
					P Without Insulation	- Without Filter	SRC-0-2HW-HT-DRE15-P -Z
						A Aluminum	SRC-0-2HW-HT-DRE15-P -A
						N Saran Net	SRC-0-2HW-HT-DRE15-P -N
						S Other	SRC-0-2HW-HT-DRE15-P -S
					PW With GW Insulation	- Without Filter	SRC-0-2HW-HT-DRE15-PW-Z
						A Aluminum	SRC-0-2HW-HT-DRE15-PW-A
						N Saran Net	SRC-0-2HW-HT-DRE15-PW-N
						S Other	SRC-0-2HW-HT-DRE15-PW-S
					PC With PC Insulation	- Without Filter	SRC-0-2HW-HT-DRE15-PC-Z
						A Aluminum	SRC-0-2HW-HT-DRE15-PC-A
						N Saran Net	SRC-0-2HW-HT-DRE15-PC-N
						S Other	SRC-0-2HW-HT-DRE15-PC-S
					PE With PE Insulation	- Without Filter	SRC-0-2HW-HT-DRE15-PE-Z
						A Aluminum	SRC-0-2HW-HT-DRE15-PE-A
						N Saran Net	SRC-0-2HW-HT-DRE15-PE-N
						S Other	SRC-0-2HW-HT-DRE15-PE-S
				With PE Insulation, 240mm Extended DRE24	- Without Plenum	- Without Filter	SRC-0-2HW-HT-DRE24-Z -Z
					P Without Insulation	- Without Filter	SRC-0-2HW-HT-DRE24-P -Z
						A Aluminum	SRC-0-2HW-HT-DRE24-P -A
						N Saran Net	SRC-0-2HW-HT-DRE24-P -N
						S Other	SRC-0-2HW-HT-DRE24-P -S
					PW With GW Insulation	- Without Filter	SRC-0-2HW-HT-DRE24-PW-Z
						A Aluminum	SRC-0-2HW-HT-DRE24-PW-A
						N Saran Net	SRC-0-2HW-HT-DRE24-PW-N
						S Other	SRC-0-2HW-HT-DRE24-PW-S
					PC With PC Insulation	- Without Filter	SRC-0-2HW-HT-DRE24-PC-Z
						A Aluminum	SRC-0-2HW-HT-DRE24-PC-A
						N Saran Net	SRC-0-2HW-HT-DRE24-PC-N
						S Other	SRC-0-2HW-HT-DRE24-PC-S
					PE With PE Insulation	- Without Filter	SRC-0-2HW-HT-DRE24-PE-Z
						A Aluminum	SRC-0-2HW-HT-DRE24-PE-A
						N Saran Net	SRC-0-2HW-HT-DRE24-PE-N
						S Other	SRC-0-2HW-HT-DRE24-PE-S

◀ 95·96

FAN COIL UNIT Lineup Chart

SRC-2SH-3R

TYPE	POWER SOURCE	MOTOR	COIL	DRAIN PAN	PLENUM	FILTER	MODEL
Ceiling Recessed Model SRC	220V 2	High Static(0-100Pa) Large Air Volume SH	3-Row Cooling/Heating 3R	With PC Insulation DRC	- Without Plenum	- Without Filter	SRC-0-2SH-3R-DRC -Z -Z
					P Without Insulation	- Without Filter	SRC-0-2SH-3R-DRC -P -Z
						A Aluminum	SRC-0-2SH-3R-DRC -P -A
						N Saran Net	SRC-0-2SH-3R-DRC -P -N
						S Other	SRC-0-2SH-3R-DRC -P -S
					PW With GW Insulation	- Without Filter	SRC-0-2SH-3R-DRC -PW-Z
						A Aluminum	SRC-0-2SH-3R-DRC -PW-A
						N Saran Net	SRC-0-2SH-3R-DRC -PW-N
						S Other	SRC-0-2SH-3R-DRC -PW-S
					PC With PC Insulation	- Without Filter	SRC-0-2SH-3R-DRC -PC-Z
						A Aluminum	SRC-0-2SH-3R-DRC -PC-A
						N Saran Net	SRC-0-2SH-3R-DRC -PC-N
						S Other	SRC-0-2SH-3R-DRC -PC-S
					PE With PE Insulation	- Without Filter	SRC-0-2SH-3R-DRC -PE-Z
						A Aluminum	SRC-0-2SH-3R-DRC -PE-A
						N Saran Net	SRC-0-2SH-3R-DRC -PE-N
						S Other	SRC-0-2SH-3R-DRC -PE-S
				With PC Insulation, 150mm Extended DRC15	- Without Plenum	- Without Filter	SRC-0-2SH-3R-DRC15-Z -Z
					P Without Insulation	- Without Filter	SRC-0-2SH-3R-DRC15-P -Z
						A Aluminum	SRC-0-2SH-3R-DRC15-P -A
						N Saran Net	SRC-0-2SH-3R-DRC15-P -N
						S Other	SRC-0-2SH-3R-DRC15-P -S
					PW With GW Insulation	- Without Filter	SRC-0-2SH-3R-DRC15-PW-Z
						A Aluminum	SRC-0-2SH-3R-DRC15-PW-A
						N Saran Net	SRC-0-2SH-3R-DRC15-PW-N
						S Other	SRC-0-2SH-3R-DRC15-PW-S
					PC With PC Insulation	- Without Filter	SRC-0-2SH-3R-DRC15-PC-Z
						A Aluminum	SRC-0-2SH-3R-DRC15-PC-A
						N Saran Net	SRC-0-2SH-3R-DRC15-PC-N
						S Other	SRC-0-2SH-3R-DRC15-PC-S
					PE With PE Insulation	- Without Filter	SRC-0-2SH-3R-DRC15-PE-Z
						A Aluminum	SRC-0-2SH-3R-DRC15-PE-A
						N Saran Net	SRC-0-2SH-3R-DRC15-PE-N
						S Other	SRC-0-2SH-3R-DRC15-PE-S
				With PC Insulation, 240mm Extended DRC24	- Without Plenum	- Without Filter	SRC-0-2SH-3R-DRC24-Z -Z
					P Without Insulation	- Without Filter	SRC-0-2SH-3R-DRC24-P -Z
						A Aluminum	SRC-0-2SH-3R-DRC24-P -A
						N Saran Net	SRC-0-2SH-3R-DRC24-P -N
						S Other	SRC-0-2SH-3R-DRC24-P -S
					PW With GW Insulation	- Without Filter	SRC-0-2SH-3R-DRC24-PW-Z
						A Aluminum	SRC-0-2SH-3R-DRC24-PW-A
						N Saran Net	SRC-0-2SH-3R-DRC24-PW-N
						S Other	SRC-0-2SH-3R-DRC24-PW-S
					PC With PC Insulation	- Without Filter	SRC-0-2SH-3R-DRC24-PC-Z
						A Aluminum	SRC-0-2SH-3R-DRC24-PC-A
						N Saran Net	SRC-0-2SH-3R-DRC24-PC-N
						S Other	SRC-0-2SH-3R-DRC24-PC-S
					PE With PE Insulation	- Without Filter	SRC-0-2SH-3R-DRC24-PE-Z
						A Aluminum	SRC-0-2SH-3R-DRC24-PE-A
						N Saran Net	SRC-0-2SH-3R-DRC24-PE-N
						S Other	SRC-0-2SH-3R-DRC24-PE-S
				With PE Insulation DRE	- Without Plenum	- Without Filter	SRC-0-2SH-3R-DRE -Z -Z
					P Without Insulation	- Without Filter	SRC-0-2SH-3R-DRE -P -Z
						A Aluminum	SRC-0-2SH-3R-DRE -P -A
						N Saran Net	SRC-0-2SH-3R-DRE -P -N
						S Other	SRC-0-2SH-3R-DRE -P -S
					PW With GW Insulation	- Without Filter	SRC-0-2SH-3R-DRE -PW-Z
						A Aluminum	SRC-0-2SH-3R-DRE -PW-A
						N Saran Net	SRC-0-2SH-3R-DRE -PW-N
						S Other	SRC-0-2SH-3R-DRE -PW-S
					PC With PC Insulation	- Without Filter	SRC-0-2SH-3R-DRE -PC-Z
						A Aluminum	SRC-0-2SH-3R-DRE -PC-A
						N Saran Net	SRC-0-2SH-3R-DRE -PC-N
						S Other	SRC-0-2SH-3R-DRE -PC-S
					PE With PE Insulation	- Without Filter	SRC-0-2SH-3R-DRE -PE-Z
						A Aluminum	SRC-0-2SH-3R-DRE -PE-A
						N Saran Net	SRC-0-2SH-3R-DRE -PE-N
						S Other	SRC-0-2SH-3R-DRE -PE-S
				With PE Insulation, 150mm Extended DRE15	- Without Plenum	- Without Filter	SRC-0-2SH-3R-DRE15-Z -Z
					P Without Insulation	- Without Filter	SRC-0-2SH-3R-DRE15-P -Z
						A Aluminum	SRC-0-2SH-3R-DRE15-P -A
						N Saran Net	SRC-0-2SH-3R-DRE15-P -N
						S Other	SRC-0-2SH-3R-DRE15-P -S
					PW With GW Insulation	- Without Filter	SRC-0-2SH-3R-DRE15-PW-Z
						A Aluminum	SRC-0-2SH-3R-DRE15-PW-A
						N Saran Net	SRC-0-2SH-3R-DRE15-PW-N
						S Other	SRC-0-2SH-3R-DRE15-PW-S
					PC With PC Insulation	- Without Filter	SRC-0-2SH-3R-DRE15-PC-Z
						A Aluminum	SRC-0-2SH-3R-DRE15-PC-A
						N Saran Net	SRC-0-2SH-3R-DRE15-PC-N
						S Other	SRC-0-2SH-3R-DRE15-PC-S
					PE With PE Insulation	- Without Filter	SRC-0-2SH-3R-DRE15-PE-Z
						A Aluminum	SRC-0-2SH-3R-DRE15-PE-A
						N Saran Net	SRC-0-2SH-3R-DRE15-PE-N
						S Other	SRC-0-2SH-3R-DRE15-PE-S
				With PE Insulation, 240mm Extended DRE24	- Without Plenum	- Without Filter	SRC-0-2SH-3R-DRE24-Z -Z
					P Without Insulation	- Without Filter	SRC-0-2SH-3R-DRE24-P -Z
						A Aluminum	SRC-0-2SH-3R-DRE24-P -A
						N Saran Net	SRC-0-2SH-3R-DRE24-P -N
						S Other	SRC-0-2SH-3R-DRE24-P -S
					PW With GW Insulation	- Without Filter	SRC-0-2SH-3R-DRE24-PW-Z
						A Aluminum	SRC-0-2SH-3R-DRE24-PW-A
						N Saran Net	SRC-0-2SH-3R-DRE24-PW-N
						S Other	SRC-0-2SH-3R-DRE24-PW-S
					PC With PC Insulation	- Without Filter	SRC-0-2SH-3R-DRE24-PC-Z
						A Aluminum	SRC-0-2SH-3R-DRE24-PC-A
						N Saran Net	SRC-0-2SH-3R-DRE24-PC-N
						S Other	SRC-0-2SH-3R-DRE24-PC-S
					PE With PE Insulation	- Without Filter	SRC-0-2SH-3R-DRE24-PE-Z
						A Aluminum	SRC-0-2SH-3R-DRE24-PE-A
						N Saran Net	SRC-0-2SH-3R-DRE24-PE-N
						S Other	SRC-0-2SH-3R-DRE24-PE-S

FAN COIL UNIT Lineup Chart

SRC-2SH-4R

TYPE	POWER SOURCE	MOTOR	COIL	DRAIN PAN	PLENUM	FILTER	MODEL
Ceiling Recessed Model SRC	220V 2	High Static(0-100Pa) Large Air Volume SH	4-Row Cooling/Heating 4R	With PC Insulation DRC	- Without Plenum	- Without Filter	SRC-0-2SH-4R-DRC -Z -Z
					P Without Insulation	- Without Filter	SRC-0-2SH-4R-DRC -P -Z
						A Aluminum	SRC-0-2SH-4R-DRC -P -A
						N Saran Net	SRC-0-2SH-4R-DRC -P -N
						S Other	SRC-0-2SH-4R-DRC -P -S
					PW With GW Insulation	- Without Filter	SRC-0-2SH-4R-DRC -PW-Z
						A Aluminum	SRC-0-2SH-4R-DRC -PW-A
						N Saran Net	SRC-0-2SH-4R-DRC -PW-N
						S Other	SRC-0-2SH-4R-DRC -PW-S
					PC With PC Insulation	- Without Filter	SRC-0-2SH-4R-DRC -PC-Z
						A Aluminum	SRC-0-2SH-4R-DRC -PC-A
						N Saran Net	SRC-0-2SH-4R-DRC -PC-N
						S Other	SRC-0-2SH-4R-DRC -PC-S
					PE With PE Insulation	- Without Filter	SRC-0-2SH-4R-DRC -PE-Z
						A Aluminum	SRC-0-2SH-4R-DRC -PE-A
						N Saran Net	SRC-0-2SH-4R-DRC -PE-N
						S Other	SRC-0-2SH-4R-DRC -PE-S
				With PC Insulation, 150mm Extended DRC15	- Without Plenum	- Without Filter	SRC-0-2SH-4R-DRC15-Z -Z
					P Without Insulation	- Without Filter	SRC-0-2SH-4R-DRC15-P -Z
						A Aluminum	SRC-0-2SH-4R-DRC15-P -A
						N Saran Net	SRC-0-2SH-4R-DRC15-P -N
						S Other	SRC-0-2SH-4R-DRC15-P -S
					PW With GW Insulation	- Without Filter	SRC-0-2SH-4R-DRC15-PW-Z
						A Aluminum	SRC-0-2SH-4R-DRC15-PW-A
						N Saran Net	SRC-0-2SH-4R-DRC15-PW-N
						S Other	SRC-0-2SH-4R-DRC15-PW-S
					PC With PC Insulation	- Without Filter	SRC-0-2SH-4R-DRC15-PC-Z
						A Aluminum	SRC-0-2SH-4R-DRC15-PC-A
						N Saran Net	SRC-0-2SH-4R-DRC15-PC-N
						S Other	SRC-0-2SH-4R-DRC15-PC-S
					PE With PE Insulation	- Without Filter	SRC-0-2SH-4R-DRC15-PE-Z
						A Aluminum	SRC-0-2SH-4R-DRC15-PE-A
						N Saran Net	SRC-0-2SH-4R-DRC15-PE-N
						S Other	SRC-0-2SH-4R-DRC15-PE-S
				With PC Insulation, 240mm Extended DRC24	- Without Plenum	- Without Filter	SRC-0-2SH-4R-DRC24-Z -Z
					P Without Insulation	- Without Filter	SRC-0-2SH-4R-DRC24-P -Z
						A Aluminum	SRC-0-2SH-4R-DRC24-P -A
						N Saran Net	SRC-0-2SH-4R-DRC24-P -N
						S Other	SRC-0-2SH-4R-DRC24-P -S
					PW With GW Insulation	- Without Filter	SRC-0-2SH-4R-DRC24-PW-Z
						A Aluminum	SRC-0-2SH-4R-DRC24-PW-A
						N Saran Net	SRC-0-2SH-4R-DRC24-PW-N
						S Other	SRC-0-2SH-4R-DRC24-PW-S
					PC With PC Insulation	- Without Filter	SRC-0-2SH-4R-DRC24-PC-Z
						A Aluminum	SRC-0-2SH-4R-DRC24-PC-A
						N Saran Net	SRC-0-2SH-4R-DRC24-PC-N
						S Other	SRC-0-2SH-4R-DRC24-PC-S
					PE With PE Insulation	- Without Filter	SRC-0-2SH-4R-DRC24-PE-Z
						A Aluminum	SRC-0-2SH-4R-DRC24-PE-A
						N Saran Net	SRC-0-2SH-4R-DRC24-PE-N
						S Other	SRC-0-2SH-4R-DRC24-PE-S
				With PE Insulation DRE	- Without Plenum	- Without Filter	SRC-0-2SH-4R-DRE -Z -Z
					P Without Insulation	- Without Filter	SRC-0-2SH-4R-DRE -P -Z
						A Aluminum	SRC-0-2SH-4R-DRE -P -A
						N Saran Net	SRC-0-2SH-4R-DRE -P -N
						S Other	SRC-0-2SH-4R-DRE -P -S
					PW With GW Insulation	- Without Filter	SRC-0-2SH-4R-DRE -PW-Z
						A Aluminum	SRC-0-2SH-4R-DRE -PW-A
						N Saran Net	SRC-0-2SH-4R-DRE -PW-N
						S Other	SRC-0-2SH-4R-DRE -PW-S
					PC With PC Insulation	- Without Filter	SRC-0-2SH-4R-DRE -PC-Z
						A Aluminum	SRC-0-2SH-4R-DRE -PC-A
						N Saran Net	SRC-0-2SH-4R-DRE -PC-N
						S Other	SRC-0-2SH-4R-DRE -PC-S
					PE With PE Insulation	- Without Filter	SRC-0-2SH-4R-DRE -PE-Z
						A Aluminum	SRC-0-2SH-4R-DRE -PE-A
						N Saran Net	SRC-0-2SH-4R-DRE -PE-N
						S Other	SRC-0-2SH-4R-DRE -PE-S
				With PE Insulation, 150mm Extended DRE15	- Without Plenum	- Without Filter	SRC-0-2SH-4R-DRE15-Z -Z
					P Without Insulation	- Without Filter	SRC-0-2SH-4R-DRE15-P -Z
						A Aluminum	SRC-0-2SH-4R-DRE15-P -A
						N Saran Net	SRC-0-2SH-4R-DRE15-P -N
						S Other	SRC-0-2SH-4R-DRE15-P -S
					PW With GW Insulation	- Without Filter	SRC-0-2SH-4R-DRE15-PW-Z
						A Aluminum	SRC-0-2SH-4R-DRE15-PW-A
						N Saran Net	SRC-0-2SH-4R-DRE15-PW-N
						S Other	SRC-0-2SH-4R-DRE15-PW-S
					PC With PC Insulation	- Without Filter	SRC-0-2SH-4R-DRE15-PC-Z
						A Aluminum	SRC-0-2SH-4R-DRE15-PC-A
						N Saran Net	SRC-0-2SH-4R-DRE15-PC-N
						S Other	SRC-0-2SH-4R-DRE15-PC-S
					PE With PE Insulation	- Without Filter	SRC-0-2SH-4R-DRE15-PE-Z
						A Aluminum	SRC-0-2SH-4R-DRE15-PE-A
						N Saran Net	SRC-0-2SH-4R-DRE15-PE-N
						S Other	SRC-0-2SH-4R-DRE15-PE-S
				With PE Insulation, 240mm Extended DRE24	- Without Plenum	- Without Filter	SRC-0-2SH-4R-DRE24-Z -Z
					P Without Insulation	- Without Filter	SRC-0-2SH-4R-DRE24-P -Z
						A Aluminum	SRC-0-2SH-4R-DRE24-P -A
						N Saran Net	SRC-0-2SH-4R-DRE24-P -N
						S Other	SRC-0-2SH-4R-DRE24-P -S
					PW With GW Insulation	- Without Filter	SRC-0-2SH-4R-DRE24-PW-Z
						A Aluminum	SRC-0-2SH-4R-DRE24-PW-A
						N Saran Net	SRC-0-2SH-4R-DRE24-PW-N
						S Other	SRC-0-2SH-4R-DRE24-PW-S
					PC With PC Insulation	- Without Filter	SRC-0-2SH-4R-DRE24-PC-Z
						A Aluminum	SRC-0-2SH-4R-DRE24-PC-A
						N Saran Net	SRC-0-2SH-4R-DRE24-PC-N
						S Other	SRC-0-2SH-4R-DRE24-PC-S
					PE With PE Insulation	- Without Filter	SRC-0-2SH-4R-DRE24-PE-Z
						A Aluminum	SRC-0-2SH-4R-DRE24-PE-A
						N Saran Net	SRC-0-2SH-4R-DRE24-PE-N
						S Other	SRC-0-2SH-4R-DRE24-PE-S

◀ 97·98

FAN COIL UNIT Lineup Chart

SRC-2SH-DC1

TYPE	POWER SOURCE	MOTOR	COIL	DRAIN PAN	PLENUM	FILTER	MODEL
Ceiling Recessed Model SRC	220V 2	High Static(0-100Pa) Large Air Volume SH	2-Row Cooling, 1-Row Heating DC1	With PC Insulation DRC	- Without Plenum	- Without Filter	SRC-0-2SH-DC1-DRC -Z -Z
					P Without Insulation	- Without Filter	SRC-0-2SH-DC1-DRC -P -Z
						A Aluminum	SRC-0-2SH-DC1-DRC -P -A
						N Saran Net	SRC-0-2SH-DC1-DRC -P -N
						S Other	SRC-0-2SH-DC1-DRC -P -S
					PW With GW Insulation	- Without Filter	SRC-0-2SH-DC1-DRC -PW-Z
						A Aluminum	SRC-0-2SH-DC1-DRC -PW-A
						N Saran Net	SRC-0-2SH-DC1-DRC -PW-N
						S Other	SRC-0-2SH-DC1-DRC -PW-S
					PC With PC Insulation	- Without Filter	SRC-0-2SH-DC1-DRC -PC-Z
						A Aluminum	SRC-0-2SH-DC1-DRC -PC-A
						N Saran Net	SRC-0-2SH-DC1-DRC -PC-N
						S Other	SRC-0-2SH-DC1-DRC -PC-S
					PE With PE Insulation	- Without Filter	SRC-0-2SH-DC1-DRC -PE-Z
						A Aluminum	SRC-0-2SH-DC1-DRC -PE-A
						N Saran Net	SRC-0-2SH-DC1-DRC -PE-N
						S Other	SRC-0-2SH-DC1-DRC -PE-S
				With PC Insulation, 150mm Extended DRC15	- Without Plenum	- Without Filter	SRC-0-2SH-DC1-DRC15-Z -Z
					P Without Insulation	- Without Filter	SRC-0-2SH-DC1-DRC15-P -Z
						A Aluminum	SRC-0-2SH-DC1-DRC15-P -A
						N Saran Net	SRC-0-2SH-DC1-DRC15-P -N
						S Other	SRC-0-2SH-DC1-DRC15-P -S
					PW With GW Insulation	- Without Filter	SRC-0-2SH-DC1-DRC15-PW-Z
						A Aluminum	SRC-0-2SH-DC1-DRC15-PW-A
						N Saran Net	SRC-0-2SH-DC1-DRC15-PW-N
						S Other	SRC-0-2SH-DC1-DRC15-PW-S
					PC With PC Insulation	- Without Filter	SRC-0-2SH-DC1-DRC15-PC-Z
						A Aluminum	SRC-0-2SH-DC1-DRC15-PC-A
						N Saran Net	SRC-0-2SH-DC1-DRC15-PC-N
						S Other	SRC-0-2SH-DC1-DRC15-PC-S
					PE With PE Insulation	- Without Filter	SRC-0-2SH-DC1-DRC15-PE-Z
						A Aluminum	SRC-0-2SH-DC1-DRC15-PE-A
						N Saran Net	SRC-0-2SH-DC1-DRC15-PE-N
						S Other	SRC-0-2SH-DC1-DRC15-PE-S
				With PC Insulation, 240mm Extended DRC24	- Without Plenum	- Without Filter	SRC-0-2SH-DC1-DRC24-Z -Z
					P Without Insulation	- Without Filter	SRC-0-2SH-DC1-DRC24-P -Z
						A Aluminum	SRC-0-2SH-DC1-DRC24-P -A
						N Saran Net	SRC-0-2SH-DC1-DRC24-P -N
						S Other	SRC-0-2SH-DC1-DRC24-P -S
					PW With GW Insulation	- Without Filter	SRC-0-2SH-DC1-DRC24-PW-Z
						A Aluminum	SRC-0-2SH-DC1-DRC24-PW-A
						N Saran Net	SRC-0-2SH-DC1-DRC24-PW-N
						S Other	SRC-0-2SH-DC1-DRC24-PW-S
					PC With PC Insulation	- Without Filter	SRC-0-2SH-DC1-DRC24-PC-Z
						A Aluminum	SRC-0-2SH-DC1-DRC24-PC-A
						N Saran Net	SRC-0-2SH-DC1-DRC24-PC-N
						S Other	SRC-0-2SH-DC1-DRC24-PC-S
					PE With PE Insulation	- Without Filter	SRC-0-2SH-DC1-DRC24-PE-Z
						A Aluminum	SRC-0-2SH-DC1-DRC24-PE-A
						N Saran Net	SRC-0-2SH-DC1-DRC24-PE-N
						S Other	SRC-0-2SH-DC1-DRC24-PE-S
				With PE Insulation DRE	- Without Plenum	- Without Filter	SRC-0-2SH-DC1-DRE -Z -Z
					P Without Insulation	- Without Filter	SRC-0-2SH-DC1-DRE -P -Z
						A Aluminum	SRC-0-2SH-DC1-DRE -P -A
						N Saran Net	SRC-0-2SH-DC1-DRE -P -N
						S Other	SRC-0-2SH-DC1-DRE -P -S
					PW With GW Insulation	- Without Filter	SRC-0-2SH-DC1-DRE -PW-Z
						A Aluminum	SRC-0-2SH-DC1-DRE -PW-A
						N Saran Net	SRC-0-2SH-DC1-DRE -PW-N
						S Other	SRC-0-2SH-DC1-DRE -PW-S
					PC With PC Insulation	- Without Filter	SRC-0-2SH-DC1-DRE -PC-Z
						A Aluminum	SRC-0-2SH-DC1-DRE -PC-A
						N Saran Net	SRC-0-2SH-DC1-DRE -PC-N
						S Other	SRC-0-2SH-DC1-DRE -PC-S
					PE With PE Insulation	- Without Filter	SRC-0-2SH-DC1-DRE -PE-Z
						A Aluminum	SRC-0-2SH-DC1-DRE -PE-A
						N Saran Net	SRC-0-2SH-DC1-DRE -PE-N
						S Other	SRC-0-2SH-DC1-DRE -PE-S
				With PE Insulation, 150mm Extended DRE15	- Without Plenum	- Without Filter	SRC-0-2SH-DC1-DRE15-Z -Z
					P Without Insulation	- Without Filter	SRC-0-2SH-DC1-DRE15-P -Z
						A Aluminum	SRC-0-2SH-DC1-DRE15-P -A
						N Saran Net	SRC-0-2SH-DC1-DRE15-P -N
						S Other	SRC-0-2SH-DC1-DRE15-P -S
					PW With GW Insulation	- Without Filter	SRC-0-2SH-DC1-DRE15-PW-Z
						A Aluminum	SRC-0-2SH-DC1-DRE15-PW-A
						N Saran Net	SRC-0-2SH-DC1-DRE15-PW-N
						S Other	SRC-0-2SH-DC1-DRE15-PW-S
					PC With PC Insulation	- Without Filter	SRC-0-2SH-DC1-DRE15-PC-Z
						A Aluminum	SRC-0-2SH-DC1-DRE15-PC-A
						N Saran Net	SRC-0-2SH-DC1-DRE15-PC-N
						S Other	SRC-0-2SH-DC1-DRE15-PC-S
					PE With PE Insulation	- Without Filter	SRC-0-2SH-DC1-DRE15-PE-Z
						A Aluminum	SRC-0-2SH-DC1-DRE15-PE-A
						N Saran Net	SRC-0-2SH-DC1-DRE15-PE-N
						S Other	SRC-0-2SH-DC1-DRE15-PE-S
				With PE Insulation, 240mm Extended DRE24	- Without Plenum	- Without Filter	SRC-0-2SH-DC1-DRE24-Z -Z
					P Without Insulation	- Without Filter	SRC-0-2SH-DC1-DRE24-P -Z
						A Aluminum	SRC-0-2SH-DC1-DRE24-P -A
						N Saran Net	SRC-0-2SH-DC1-DRE24-P -N
						S Other	SRC-0-2SH-DC1-DRE24-P -S
					PW With GW Insulation	- Without Filter	SRC-0-2SH-DC1-DRE24-PW-Z
						A Aluminum	SRC-0-2SH-DC1-DRE24-PW-A
						N Saran Net	SRC-0-2SH-DC1-DRE24-PW-N
						S Other	SRC-0-2SH-DC1-DRE24-PW-S
					PC With PC Insulation	- Without Filter	SRC-0-2SH-DC1-DRE24-PC-Z
						A Aluminum	SRC-0-2SH-DC1-DRE24-PC-A
						N Saran Net	SRC-0-2SH-DC1-DRE24-PC-N
						S Other	SRC-0-2SH-DC1-DRE24-PC-S
					PE With PE Insulation	- Without Filter	SRC-0-2SH-DC1-DRE24-PE-Z
						A Aluminum	SRC-0-2SH-DC1-DRE24-PE-A
						N Saran Net	SRC-0-2SH-DC1-DRE24-PE-N
						S Other	SRC-0-2SH-DC1-DRE24-PE-S

FAN COIL UNIT Lineup Chart

SRC-2SH-DC2

TYPE	POWER SOURCE	MOTOR	COIL	DRAIN PAN	PLENUM	FILTER	MODEL
Ceiling Recessed Model SRC	220V 2	High Static(0-100Pa) Large Air Volume SH	3-Row Cooling, 1-Row Heating DC2	With PC Insulation DRC	- Without Plenum	- Without Filter	SRC-0-2SH-DC2-DRC -Z -Z
					P Without Insulation	- Without Filter	SRC-0-2SH-DC2-DRC -P -Z
						A Aluminum	SRC-0-2SH-DC2-DRC -P -A
						N Saran Net	SRC-0-2SH-DC2-DRC -P -N
						S Other	SRC-0-2SH-DC2-DRC -P -S
					PW With GW Insulation	- Without Filter	SRC-0-2SH-DC2-DRC -PW-Z
						A Aluminum	SRC-0-2SH-DC2-DRC -PW-A
						N Saran Net	SRC-0-2SH-DC2-DRC -PW-N
						S Other	SRC-0-2SH-DC2-DRC -PW-S
					PC With PC Insulation	- Without Filter	SRC-0-2SH-DC2-DRC -PC-Z
						A Aluminum	SRC-0-2SH-DC2-DRC -PC-A
						N Saran Net	SRC-0-2SH-DC2-DRC -PC-N
						S Other	SRC-0-2SH-DC2-DRC -PC-S
					PE With PE Insulation	- Without Filter	SRC-0-2SH-DC2-DRC -PE-Z
						A Aluminum	SRC-0-2SH-DC2-DRC -PE-A
						N Saran Net	SRC-0-2SH-DC2-DRC -PE-N
						S Other	SRC-0-2SH-DC2-DRC -PE-S
				With PC Insulation, 150mm Extended DRC15	- Without Plenum	- Without Filter	SRC-0-2SH-DC2-DRC15-Z -Z
					P Without Insulation	- Without Filter	SRC-0-2SH-DC2-DRC15-P -Z
						A Aluminum	SRC-0-2SH-DC2-DRC15-P -A
						N Saran Net	SRC-0-2SH-DC2-DRC15-P -N
						S Other	SRC-0-2SH-DC2-DRC15-P -S
					PW With GW Insulation	- Without Filter	SRC-0-2SH-DC2-DRC15-PW-Z
						A Aluminum	SRC-0-2SH-DC2-DRC15-PW-A
						N Saran Net	SRC-0-2SH-DC2-DRC15-PW-N
						S Other	SRC-0-2SH-DC2-DRC15-PW-S
					PC With PC Insulation	- Without Filter	SRC-0-2SH-DC2-DRC15-PC-Z
						A Aluminum	SRC-0-2SH-DC2-DRC15-PC-A
						N Saran Net	SRC-0-2SH-DC2-DRC15-PC-N
						S Other	SRC-0-2SH-DC2-DRC15-PC-S
					PE With PE Insulation	- Without Filter	SRC-0-2SH-DC2-DRC15-PE-Z
						A Aluminum	SRC-0-2SH-DC2-DRC15-PE-A
						N Saran Net	SRC-0-2SH-DC2-DRC15-PE-N
						S Other	SRC-0-2SH-DC2-DRC15-PE-S
				With PC Insulation, 240mm Extended DRC24	- Without Plenum	- Without Filter	SRC-0-2SH-DC2-DRC24-Z -Z
					P Without Insulation	- Without Filter	SRC-0-2SH-DC2-DRC24-P -Z
						A Aluminum	SRC-0-2SH-DC2-DRC24-P -A
						N Saran Net	SRC-0-2SH-DC2-DRC24-P -N
						S Other	SRC-0-2SH-DC2-DRC24-P -S
					PW With GW Insulation	- Without Filter	SRC-0-2SH-DC2-DRC24-PW-Z
						A Aluminum	SRC-0-2SH-DC2-DRC24-PW-A
						N Saran Net	SRC-0-2SH-DC2-DRC24-PW-N
						S Other	SRC-0-2SH-DC2-DRC24-PW-S
					PC With PC Insulation	- Without Filter	SRC-0-2SH-DC2-DRC24-PC-Z
						A Aluminum	SRC-0-2SH-DC2-DRC24-PC-A
						N Saran Net	SRC-0-2SH-DC2-DRC24-PC-N
						S Other	SRC-0-2SH-DC2-DRC24-PC-S
					PE With PE Insulation	- Without Filter	SRC-0-2SH-DC2-DRC24-PE-Z
						A Aluminum	SRC-0-2SH-DC2-DRC24-PE-A
						N Saran Net	SRC-0-2SH-DC2-DRC24-PE-N
						S Other	SRC-0-2SH-DC2-DRC24-PE-S
				With PE Insulation DRE	- Without Plenum	- Without Filter	SRC-0-2SH-DC2-DRE -Z -Z
					P Without Insulation	- Without Filter	SRC-0-2SH-DC2-DRE -P -Z
						A Aluminum	SRC-0-2SH-DC2-DRE -P -A
						N Saran Net	SRC-0-2SH-DC2-DRE -P -N
						S Other	SRC-0-2SH-DC2-DRE -P -S
					PW With GW Insulation	- Without Filter	SRC-0-2SH-DC2-DRE -PW-Z
						A Aluminum	SRC-0-2SH-DC2-DRE -PW-A
						N Saran Net	SRC-0-2SH-DC2-DRE -PW-N
						S Other	SRC-0-2SH-DC2-DRE -PW-S
					PC With PC Insulation	- Without Filter	SRC-0-2SH-DC2-DRE -PC-Z
						A Aluminum	SRC-0-2SH-DC2-DRE -PC-A
						N Saran Net	SRC-0-2SH-DC2-DRE -PC-N
						S Other	SRC-0-2SH-DC2-DRE -PC-S
					PE With PE Insulation	- Without Filter	SRC-0-2SH-DC2-DRE -PE-Z
						A Aluminum	SRC-0-2SH-DC2-DRE -PE-A
						N Saran Net	SRC-0-2SH-DC2-DRE -PE-N
						S Other	SRC-0-2SH-DC2-DRE -PE-S
				With PE Insulation, 150mm Extended DRE15	- Without Plenum	- Without Filter	SRC-0-2SH-DC2-DRE15-Z -Z
					P Without Insulation	- Without Filter	SRC-0-2SH-DC2-DRE15-P -Z
						A Aluminum	SRC-0-2SH-DC2-DRE15-P -A
						N Saran Net	SRC-0-2SH-DC2-DRE15-P -N
						S Other	SRC-0-2SH-DC2-DRE15-P -S
					PW With GW Insulation	- Without Filter	SRC-0-2SH-DC2-DRE15-PW-Z
						A Aluminum	SRC-0-2SH-DC2-DRE15-PW-A
						N Saran Net	SRC-0-2SH-DC2-DRE15-PW-N
						S Other	SRC-0-2SH-DC2-DRE15-PW-S
					PC With PC Insulation	- Without Filter	SRC-0-2SH-DC2-DRE15-PC-Z
						A Aluminum	SRC-0-2SH-DC2-DRE15-PC-A
						N Saran Net	SRC-0-2SH-DC2-DRE15-PC-N
						S Other	SRC-0-2SH-DC2-DRE15-PC-S
					PE With PE Insulation	- Without Filter	SRC-0-2SH-DC2-DRE15-PE-Z
						A Aluminum	SRC-0-2SH-DC2-DRE15-PE-A
						N Saran Net	SRC-0-2SH-DC2-DRE15-PE-N
						S Other	SRC-0-2SH-DC2-DRE15-PE-S
				With PE Insulation, 240mm Extended DRE24	- Without Plenum	- Without Filter	SRC-0-2SH-DC2-DRE24-Z -Z
					P Without Insulation	- Without Filter	SRC-0-2SH-DC2-DRE24-P -Z
						A Aluminum	SRC-0-2SH-DC2-DRE24-P -A
						N Saran Net	SRC-0-2SH-DC2-DRE24-P -N
						S Other	SRC-0-2SH-DC2-DRE24-P -S
					PW With GW Insulation	- Without Filter	SRC-0-2SH-DC2-DRE24-PW-Z
						A Aluminum	SRC-0-2SH-DC2-DRE24-PW-A
						N Saran Net	SRC-0-2SH-DC2-DRE24-PW-N
						S Other	SRC-0-2SH-DC2-DRE24-PW-S
					PC With PC Insulation	- Without Filter	SRC-0-2SH-DC2-DRE24-PC-Z
						A Aluminum	SRC-0-2SH-DC2-DRE24-PC-A
						N Saran Net	SRC-0-2SH-DC2-DRE24-PC-N
						S Other	SRC-0-2SH-DC2-DRE24-PC-S
					PE With PE Insulation	- Without Filter	SRC-0-2SH-DC2-DRE24-PE-Z
						A Aluminum	SRC-0-2SH-DC2-DRE24-PE-A
						N Saran Net	SRC-0-2SH-DC2-DRE24-PE-N
						S Other	SRC-0-2SH-DC2-DRE24-PE-S

◀99·100

FAN COIL UNIT Lineup Chart

SRC-2SH-HT

TYPE	POWER SOURCE	MOTOR	COIL	DRAIN PAN	PLENUM	FILTER	MODEL
Ceiling Recessed Model SRC	220V 2	High Static(0-100Pa) Large Air Volume SH	4-Row, High Temperature Rise HT	With PC Insulation DRC	- Without Plenum	- Without Filter	SRC-0-2SH-HT-DRC -Z -Z
					P Without Insulation	- Without Filter	SRC-0-2SH-HT-DRC -P -Z
						A Aluminum	SRC-0-2SH-HT-DRC -P -A
						N Saran Net	SRC-0-2SH-HT-DRC -P -N
						S Other	SRC-0-2SH-HT-DRC -P -S
					PW With GW Insulation	- Without Filter	SRC-0-2SH-HT-DRC -PW-Z
						A Aluminum	SRC-0-2SH-HT-DRC -PW-A
						N Saran Net	SRC-0-2SH-HT-DRC -PW-N
						S Other	SRC-0-2SH-HT-DRC -PW-S
					PC With PC Insulation	- Without Filter	SRC-0-2SH-HT-DRC -PC-Z
						A Aluminum	SRC-0-2SH-HT-DRC -PC-A
						N Saran Net	SRC-0-2SH-HT-DRC -PC-N
						S Other	SRC-0-2SH-HT-DRC -PC-S
					PE With PE Insulation	- Without Filter	SRC-0-2SH-HT-DRC -PE-Z
						A Aluminum	SRC-0-2SH-HT-DRC -PE-A
						N Saran Net	SRC-0-2SH-HT-DRC -PE-N
						S Other	SRC-0-2SH-HT-DRC -PE-S
				With PC Insulation, 150mm Extended DRC15	- Without Plenum	- Without Filter	SRC-0-2SH-HT-DRC15-Z -Z
					P Without Insulation	- Without Filter	SRC-0-2SH-HT-DRC15-P -Z
						A Aluminum	SRC-0-2SH-HT-DRC15-P -A
						N Saran Net	SRC-0-2SH-HT-DRC15-P -N
						S Other	SRC-0-2SH-HT-DRC15-P -S
					PW With GW Insulation	- Without Filter	SRC-0-2SH-HT-DRC15-PW-Z
						A Aluminum	SRC-0-2SH-HT-DRC15-PW-A
						N Saran Net	SRC-0-2SH-HT-DRC15-PW-N
						S Other	SRC-0-2SH-HT-DRC15-PW-S
					PC With PC Insulation	- Without Filter	SRC-0-2SH-HT-DRC15-PC-Z
						A Aluminum	SRC-0-2SH-HT-DRC15-PC-A
						N Saran Net	SRC-0-2SH-HT-DRC15-PC-N
						S Other	SRC-0-2SH-HT-DRC15-PC-S
					PE With PE Insulation	- Without Filter	SRC-0-2SH-HT-DRC15-PE-Z
						A Aluminum	SRC-0-2SH-HT-DRC15-PE-A
						N Saran Net	SRC-0-2SH-HT-DRC15-PE-N
						S Other	SRC-0-2SH-HT-DRC15-PE-S
				With PC Insulation, 240mm Extended DRC24	- Without Plenum	- Without Filter	SRC-0-2SH-HT-DRC24-Z -Z
					P Without Insulation	- Without Filter	SRC-0-2SH-HT-DRC24-P -Z
						A Aluminum	SRC-0-2SH-HT-DRC24-P -A
						N Saran Net	SRC-0-2SH-HT-DRC24-P -N
						S Other	SRC-0-2SH-HT-DRC24-P -S
					PW With GW Insulation	- Without Filter	SRC-0-2SH-HT-DRC24-PW-Z
						A Aluminum	SRC-0-2SH-HT-DRC24-PW-A
						N Saran Net	SRC-0-2SH-HT-DRC24-PW-N
						S Other	SRC-0-2SH-HT-DRC24-PW-S
					PC With PC Insulation	- Without Filter	SRC-0-2SH-HT-DRC24-PC-Z
						A Aluminum	SRC-0-2SH-HT-DRC24-PC-A
						N Saran Net	SRC-0-2SH-HT-DRC24-PC-N
						S Other	SRC-0-2SH-HT-DRC24-PC-S
					PE With PE Insulation	- Without Filter	SRC-0-2SH-HT-DRC24-PE-Z
						A Aluminum	SRC-0-2SH-HT-DRC24-PE-A
						N Saran Net	SRC-0-2SH-HT-DRC24-PE-N
						S Other	SRC-0-2SH-HT-DRC24-PE-S
				With PE Insulation DRE	- Without Plenum	- Without Filter	SRC-0-2SH-HT-DRE -Z -Z
					P Without Insulation	- Without Filter	SRC-0-2SH-HT-DRE -P -Z
						A Aluminum	SRC-0-2SH-HT-DRE -P -A
						N Saran Net	SRC-0-2SH-HT-DRE -P -N
						S Other	SRC-0-2SH-HT-DRE -P -S
					PW With GW Insulation	- Without Filter	SRC-0-2SH-HT-DRE -PW-Z
						A Aluminum	SRC-0-2SH-HT-DRE -PW-A
						N Saran Net	SRC-0-2SH-HT-DRE -PW-N
						S Other	SRC-0-2SH-HT-DRE -PW-S
					PC With PC Insulation	- Without Filter	SRC-0-2SH-HT-DRE -PC-Z
						A Aluminum	SRC-0-2SH-HT-DRE -PC-A
						N Saran Net	SRC-0-2SH-HT-DRE -PC-N
						S Other	SRC-0-2SH-HT-DRE -PC-S
					PE With PE Insulation	- Without Filter	SRC-0-2SH-HT-DRE -PE-Z
						A Aluminum	SRC-0-2SH-HT-DRE -PE-A
						N Saran Net	SRC-0-2SH-HT-DRE -PE-N
						S Other	SRC-0-2SH-HT-DRE -PE-S
				With PE Insulation, 150mm Extended DRE15	- Without Plenum	- Without Filter	SRC-0-2SH-HT-DRE15-Z -Z
					P Without Insulation	- Without Filter	SRC-0-2SH-HT-DRE15-P -Z
						A Aluminum	SRC-0-2SH-HT-DRE15-P -A
						N Saran Net	SRC-0-2SH-HT-DRE15-P -N
						S Other	SRC-0-2SH-HT-DRE15-P -S
					PW With GW Insulation	- Without Filter	SRC-0-2SH-HT-DRE15-PW-Z
						A Aluminum	SRC-0-2SH-HT-DRE15-PW-A
						N Saran Net	SRC-0-2SH-HT-DRE15-PW-N
						S Other	SRC-0-2SH-HT-DRE15-PW-S
					PC With PC Insulation	- Without Filter	SRC-0-2SH-HT-DRE15-PC-Z
						A Aluminum	SRC-0-2SH-HT-DRE15-PC-A
						N Saran Net	SRC-0-2SH-HT-DRE15-PC-N
						S Other	SRC-0-2SH-HT-DRE15-PC-S
					PE With PE Insulation	- Without Filter	SRC-0-2SH-HT-DRE15-PE-Z
						A Aluminum	SRC-0-2SH-HT-DRE15-PE-A
						N Saran Net	SRC-0-2SH-HT-DRE15-PE-N
						S Other	SRC-0-2SH-HT-DRE15-PE-S
				With PE Insulation, 240mm Extended DRE24	- Without Plenum	- Without Filter	SRC-0-2SH-HT-DRE24-Z -Z
					P Without Insulation	- Without Filter	SRC-0-2SH-HT-DRE24-P -Z
						A Aluminum	SRC-0-2SH-HT-DRE24-P -A
						N Saran Net	SRC-0-2SH-HT-DRE24-P -N
						S Other	SRC-0-2SH-HT-DRE24-P -S
					PW With GW Insulation	- Without Filter	SRC-0-2SH-HT-DRE24-PW-Z
						A Aluminum	SRC-0-2SH-HT-DRE24-PW-A
						N Saran Net	SRC-0-2SH-HT-DRE24-PW-N
						S Other	SRC-0-2SH-HT-DRE24-PW-S
					PC With PC Insulation	- Without Filter	SRC-0-2SH-HT-DRE24-PC-Z
						A Aluminum	SRC-0-2SH-HT-DRE24-PC-A
						N Saran Net	SRC-0-2SH-HT-DRE24-PC-N
						S Other	SRC-0-2SH-HT-DRE24-PC-S
					PE With PE Insulation	- Without Filter	SRC-0-2SH-HT-DRE24-PE-Z
						A Aluminum	SRC-0-2SH-HT-DRE24-PE-A
						N Saran Net	SRC-0-2SH-HT-DRE24-PE-N
						S Other	SRC-0-2SH-HT-DRE24-PE-S

FAN COIL UNIT Lineup Chart

TCRH-2HW-4R

TYPE	POWER SOURCE	MOTOR	COIL	DRAIN PAN	PLENUM	FILTER	MODEL
Ceiling Recessed, High Static Model TCRH	220V 2	Standard Static (0-150Pa) HW	4-Row Cooling/Heating 4R	With PC Insulation DRC	- Without Plenum	- Without Filter	TCRH-0-2HW-4R-DRC -Z -Z
					P Without Insulation	- Without Filter	TCRH-0-2HW-4R-DRC -P -Z
						A Aluminum	TCRH-0-2HW-4R-DRC -P -A
						N Saran Net	TCRH-0-2HW-4R-DRC -P -N
						S Other	TCRH-0-2HW-4R-DRC -P -S
					PW With GW Insulation	- Without Filter	TCRH-0-2HW-4R-DRC -PW-Z
						A Aluminum	TCRH-0-2HW-4R-DRC -PW-A
						N Saran Net	TCRH-0-2HW-4R-DRC -PW-N
						S Other	TCRH-0-2HW-4R-DRC -PW-S
					PC With PC Insulation	- Without Filter	TCRH-0-2HW-4R-DRC -PC-Z
						A Aluminum	TCRH-0-2HW-4R-DRC -PC-A
						N Saran Net	TCRH-0-2HW-4R-DRC -PC-N
						S Other	TCRH-0-2HW-4R-DRC -PC-S
					PE With PE Insulation	- Without Filter	TCRH-0-2HW-4R-DRC -PE-Z
						A Aluminum	TCRH-0-2HW-4R-DRC -PE-A
						N Saran Net	TCRH-0-2HW-4R-DRC -PE-N
						S Other	TCRH-0-2HW-4R-DRC -PE-S
				With PC Insulation, 150mm Extended DRC15	- Without Plenum	- Without Filter	TCRH-0-2HW-4R-DRC15-Z -Z
					P Without Insulation	- Without Filter	TCRH-0-2HW-4R-DRC15-P -Z
						A Aluminum	TCRH-0-2HW-4R-DRC15-P -A
						N Saran Net	TCRH-0-2HW-4R-DRC15-P -N
						S Other	TCRH-0-2HW-4R-DRC15-P -S
					PW With GW Insulation	- Without Filter	TCRH-0-2HW-4R-DRC15-PW-Z
						A Aluminum	TCRH-0-2HW-4R-DRC15-PW-A
						N Saran Net	TCRH-0-2HW-4R-DRC15-PW-N
						S Other	TCRH-0-2HW-4R-DRC15-PW-S
					PC With PC Insulation	- Without Filter	TCRH-0-2HW-4R-DRC15-PC-Z
						A Aluminum	TCRH-0-2HW-4R-DRC15-PC-A
						N Saran Net	TCRH-0-2HW-4R-DRC15-PC-N
						S Other	TCRH-0-2HW-4R-DRC15-PC-S
					PE With PE Insulation	- Without Filter	TCRH-0-2HW-4R-DRC15-PE-Z
						A Aluminum	TCRH-0-2HW-4R-DRC15-PE-A
						N Saran Net	TCRH-0-2HW-4R-DRC15-PE-N
						S Other	TCRH-0-2HW-4R-DRC15-PE-S
				With PE Insulation DRE	- Without Plenum	- Without Filter	TCRH-0-2HW-4R-DRE -Z -Z
					P Without Insulation	- Without Filter	TCRH-0-2HW-4R-DRE -P -Z
						A Aluminum	TCRH-0-2HW-4R-DRE -P -A
						N Saran Net	TCRH-0-2HW-4R-DRE -P -N
						S Other	TCRH-0-2HW-4R-DRE -P -S
					PW With GW Insulation	- Without Filter	TCRH-0-2HW-4R-DRE -PW-Z
						A Aluminum	TCRH-0-2HW-4R-DRE -PW-A
						N Saran Net	TCRH-0-2HW-4R-DRE -PW-N
						S Other	TCRH-0-2HW-4R-DRE -PW-S
					PC With PC Insulation	- Without Filter	TCRH-0-2HW-4R-DRE -PC-Z
						A Aluminum	TCRH-0-2HW-4R-DRE -PC-A
						N Saran Net	TCRH-0-2HW-4R-DRE -PC-N
						S Other	TCRH-0-2HW-4R-DRE -PC-S
					PE With PE Insulation	- Without Filter	TCRH-0-2HW-4R-DRE -PE-Z
						A Aluminum	TCRH-0-2HW-4R-DRE -PE-A
						N Saran Net	TCRH-0-2HW-4R-DRE -PE-N
						S Other	TCRH-0-2HW-4R-DRE -PE-S
				With PE Insulation, 150mm Extended DRE15	- Without Plenum	- Without Filter	TCRH-0-2HW-4R-DRE15-Z -Z
					P Without Insulation	- Without Filter	TCRH-0-2HW-4R-DRE15-P -Z
						A Aluminum	TCRH-0-2HW-4R-DRE15-P -A
						N Saran Net	TCRH-0-2HW-4R-DRE15-P -N
						S Other	TCRH-0-2HW-4R-DRE15-P -S
					PW With GW Insulation	- Without Filter	TCRH-0-2HW-4R-DRE15-PW-Z
						A Aluminum	TCRH-0-2HW-4R-DRE15-PW-A
						N Saran Net	TCRH-0-2HW-4R-DRE15-PW-N
						S Other	TCRH-0-2HW-4R-DRE15-PW-S
					PC With PC Insulation	- Without Filter	TCRH-0-2HW-4R-DRE15-PC-Z
						A Aluminum	TCRH-0-2HW-4R-DRE15-PC-A
						N Saran Net	TCRH-0-2HW-4R-DRE15-PC-N
						S Other	TCRH-0-2HW-4R-DRE15-PC-S
					PE With PE Insulation	- Without Filter	TCRH-0-2HW-4R-DRE15-PE-Z
						A Aluminum	TCRH-0-2HW-4R-DRE15-PE-A
						N Saran Net	TCRH-0-2HW-4R-DRE15-PE-N
						S Other	TCRH-0-2HW-4R-DRE15-PE-S

◀ 101
102

FAN COIL UNIT Lineup Chart

TCRH-2HW-6R

TYPE	POWER SOURCE	MOTOR	COIL	DRAIN PAN	PLENUM	FILTER	MODEL
Ceiling Recessed, High Static Model TCRH	220V 2	Standard Static (0-150Pa) HW	6-Row Cooling/Heating 6R	With PC Insulation DRC	- Without Plenum	- Without Filter	TCRH-0-2HW-6R-DRC -Z -Z
					P Without Insulation	- Without Filter	TCRH-0-2HW-6R-DRC -P -Z
						A Aluminum	TCRH-0-2HW-6R-DRC -P -A
						N Saran Net	TCRH-0-2HW-6R-DRC -P -N
						S Other	TCRH-0-2HW-6R-DRC -P -S
					PW With GW Insulation	- Without Filter	TCRH-0-2HW-6R-DRC -PW-Z
						A Aluminum	TCRH-0-2HW-6R-DRC -PW-A
						N Saran Net	TCRH-0-2HW-6R-DRC -PW-N
						S Other	TCRH-0-2HW-6R-DRC -PW-S
					PC With PC Insulation	- Without Filter	TCRH-0-2HW-6R-DRC -PC-Z
						A Aluminum	TCRH-0-2HW-6R-DRC -PC-A
						N Saran Net	TCRH-0-2HW-6R-DRC -PC-N
						S Other	TCRH-0-2HW-6R-DRC -PC-S
					PE With PE Insulation	- Without Filter	TCRH-0-2HW-6R-DRC -PE-Z
						A Aluminum	TCRH-0-2HW-6R-DRC -PE-A
						N Saran Net	TCRH-0-2HW-6R-DRC -PE-N
						S Other	TCRH-0-2HW-6R-DRC -PE-S
				With PC Insulation, 150mm Extended DRC15	- Without Plenum	- Without Filter	TCRH-0-2HW-6R-DRC15-Z -Z
					P Without Insulation	- Without Filter	TCRH-0-2HW-6R-DRC15-P -Z
						A Aluminum	TCRH-0-2HW-6R-DRC15-P -A
						N Saran Net	TCRH-0-2HW-6R-DRC15-P -N
						S Other	TCRH-0-2HW-6R-DRC15-P -S
					PW With GW Insulation	- Without Filter	TCRH-0-2HW-6R-DRC15-PW-Z
						A Aluminum	TCRH-0-2HW-6R-DRC15-PW-A
						N Saran Net	TCRH-0-2HW-6R-DRC15-PW-N
						S Other	TCRH-0-2HW-6R-DRC15-PW-S
					PC With PC Insulation	- Without Filter	TCRH-0-2HW-6R-DRC15-PC-Z
						A Aluminum	TCRH-0-2HW-6R-DRC15-PC-A
						N Saran Net	TCRH-0-2HW-6R-DRC15-PC-N
						S Other	TCRH-0-2HW-6R-DRC15-PC-S
					PE With PE Insulation	- Without Filter	TCRH-0-2HW-6R-DRC15-PE-Z
						A Aluminum	TCRH-0-2HW-6R-DRC15-PE-A
						N Saran Net	TCRH-0-2HW-6R-DRC15-PE-N
						S Other	TCRH-0-2HW-6R-DRC15-PE-S
				With PE Insulation DRE	- Without Plenum	- Without Filter	TCRH-0-2HW-6R-DRE -Z -Z
					P Without Insulation	- Without Filter	TCRH-0-2HW-6R-DRE -P -Z
						A Aluminum	TCRH-0-2HW-6R-DRE -P -A
						N Saran Net	TCRH-0-2HW-6R-DRE -P -N
						S Other	TCRH-0-2HW-6R-DRE -P -S
					PW With GW Insulation	- Without Filter	TCRH-0-2HW-6R-DRE -PW-Z
						A Aluminum	TCRH-0-2HW-6R-DRE -PW-A
						N Saran Net	TCRH-0-2HW-6R-DRE -PW-N
						S Other	TCRH-0-2HW-6R-DRE -PW-S
					PC With PC Insulation	- Without Filter	TCRH-0-2HW-6R-DRE -PC-Z
						A Aluminum	TCRH-0-2HW-6R-DRE -PC-A
						N Saran Net	TCRH-0-2HW-6R-DRE -PC-N
						S Other	TCRH-0-2HW-6R-DRE -PC-S
					PE With PE Insulation	- Without Filter	TCRH-0-2HW-6R-DRE -PE-Z
						A Aluminum	TCRH-0-2HW-6R-DRE -PE-A
						N Saran Net	TCRH-0-2HW-6R-DRE -PE-N
						S Other	TCRH-0-2HW-6R-DRE -PE-S
				With PE Insulation, 150mm Extended DRE15	- Without Plenum	- Without Filter	TCRH-0-2HW-6R-DRE15-Z -Z
					P Without Insulation	- Without Filter	TCRH-0-2HW-6R-DRE15-P -Z
						A Aluminum	TCRH-0-2HW-6R-DRE15-P -A
						N Saran Net	TCRH-0-2HW-6R-DRE15-P -N
						S Other	TCRH-0-2HW-6R-DRE15-P -S
					PW With GW Insulation	- Without Filter	TCRH-0-2HW-6R-DRE15-PW-Z
						A Aluminum	TCRH-0-2HW-6R-DRE15-PW-A
						N Saran Net	TCRH-0-2HW-6R-DRE15-PW-N
						S Other	TCRH-0-2HW-6R-DRE15-PW-S
					PC With PC Insulation	- Without Filter	TCRH-0-2HW-6R-DRE15-PC-Z
						A Aluminum	TCRH-0-2HW-6R-DRE15-PC-A
						N Saran Net	TCRH-0-2HW-6R-DRE15-PC-N
						S Other	TCRH-0-2HW-6R-DRE15-PC-S
					PE With PE Insulation	- Without Filter	TCRH-0-2HW-6R-DRE15-PE-Z
						A Aluminum	TCRH-0-2HW-6R-DRE15-PE-A
						N Saran Net	TCRH-0-2HW-6R-DRE15-PE-N
						S Other	TCRH-0-2HW-6R-DRE15-PE-S

FAN COIL UNIT Lineup Chart

TCRH-2HW-DC2

TYPE	POWER SOURCE	MOTOR	COIL	DRAIN PAN	PLENUM	FILTER	MODEL
Ceiling Recessed, High Static Model TCRH	220V 2	Standard Static (0-150Pa) HW	3-Row Cooling 1-Row Heating DC2	With PC Insulation DRC	- Without Plenum	- Without Filter	TCRH-0-2HW-DC2-DRC -Z -Z
					P Without Insulation	- Without Filter	TCRH-0-2HW-DC2-DRC -P -Z
						A Aluminum	TCRH-0-2HW-DC2-DRC -P -A
						N Saran Net	TCRH-0-2HW-DC2-DRC -P -N
						S Other	TCRH-0-2HW-DC2-DRC -P -S
					PW With GW Insulation	- Without Filter	TCRH-0-2HW-DC2-DRC -PW-Z
						A Aluminum	TCRH-0-2HW-DC2-DRC -PW-A
						N Saran Net	TCRH-0-2HW-DC2-DRC -PW-N
						S Other	TCRH-0-2HW-DC2-DRC -PW-S
					PC With PC Insulation	- Without Filter	TCRH-0-2HW-DC2-DRC -PC-Z
						A Aluminum	TCRH-0-2HW-DC2-DRC -PC-A
						N Saran Net	TCRH-0-2HW-DC2-DRC -PC-N
						S Other	TCRH-0-2HW-DC2-DRC -PC-S
					PE With PE Insulation	- Without Filter	TCRH-0-2HW-DC2-DRC -PE-Z
						A Aluminum	TCRH-0-2HW-DC2-DRC -PE-A
						N Saran Net	TCRH-0-2HW-DC2-DRC -PE-N
						S Other	TCRH-0-2HW-DC2-DRC -PE-S
				With PC Insulation, 150mm Extended DRC15	- Without Plenum	- Without Filter	TCRH-0-2HW-DC2-DRC15-Z -Z
					P Without Insulation	- Without Filter	TCRH-0-2HW-DC2-DRC15-P -Z
						A Aluminum	TCRH-0-2HW-DC2-DRC15-P -A
						N Saran Net	TCRH-0-2HW-DC2-DRC15-P -N
						S Other	TCRH-0-2HW-DC2-DRC15-P -S
					PW With GW Insulation	- Without Filter	TCRH-0-2HW-DC2-DRC15-PW-Z
						A Aluminum	TCRH-0-2HW-DC2-DRC15-PW-A
						N Saran Net	TCRH-0-2HW-DC2-DRC15-PW-N
						S Other	TCRH-0-2HW-DC2-DRC15-PW-S
					PC With PC Insulation	- Without Filter	TCRH-0-2HW-DC2-DRC15-PC-Z
						A Aluminum	TCRH-0-2HW-DC2-DRC15-PC-A
						N Saran Net	TCRH-0-2HW-DC2-DRC15-PC-N
						S Other	TCRH-0-2HW-DC2-DRC15-PC-S
					PE With PE Insulation	- Without Filter	TCRH-0-2HW-DC2-DRC15-PE-Z
						A Aluminum	TCRH-0-2HW-DC2-DRC15-PE-A
						N Saran Net	TCRH-0-2HW-DC2-DRC15-PE-N
						S Other	TCRH-0-2HW-DC2-DRC15-PE-S
				With PE Insulation DRE	- Without Plenum	- Without Filter	TCRH-0-2HW-DC2-DRE -Z -Z
					P Without Insulation	- Without Filter	TCRH-0-2HW-DC2-DRE -P -Z
						A Aluminum	TCRH-0-2HW-DC2-DRE -P -A
						N Saran Net	TCRH-0-2HW-DC2-DRE -P -N
						S Other	TCRH-0-2HW-DC2-DRE -P -S
					PW With GW Insulation	- Without Filter	TCRH-0-2HW-DC2-DRE -PW-Z
						A Aluminum	TCRH-0-2HW-DC2-DRE -PW-A
						N Saran Net	TCRH-0-2HW-DC2-DRE -PW-N
						S Other	TCRH-0-2HW-DC2-DRE -PW-S
					PC With PC Insulation	- Without Filter	TCRH-0-2HW-DC2-DRE -PC-Z
						A Aluminum	TCRH-0-2HW-DC2-DRE -PC-A
						N Saran Net	TCRH-0-2HW-DC2-DRE -PC-N
						S Other	TCRH-0-2HW-DC2-DRE -PC-S
					PE With PE Insulation	- Without Filter	TCRH-0-2HW-DC2-DRE -PE-Z
						A Aluminum	TCRH-0-2HW-DC2-DRE -PE-A
						N Saran Net	TCRH-0-2HW-DC2-DRE -PE-N
						S Other	TCRH-0-2HW-DC2-DRE -PE-S
				With PE Insulation, 150mm Extended DRE15	- Without Plenum	- Without Filter	TCRH-0-2HW-DC2-DRE15-Z -Z
					P Without Insulation	- Without Filter	TCRH-0-2HW-DC2-DRE15-P -Z
						A Aluminum	TCRH-0-2HW-DC2-DRE15-P -A
						N Saran Net	TCRH-0-2HW-DC2-DRE15-P -N
						S Other	TCRH-0-2HW-DC2-DRE15-P -S
					PW With GW Insulation	- Without Filter	TCRH-0-2HW-DC2-DRE15-PW-Z
						A Aluminum	TCRH-0-2HW-DC2-DRE15-PW-A
						N Saran Net	TCRH-0-2HW-DC2-DRE15-PW-N
						S Other	TCRH-0-2HW-DC2-DRE15-PW-S
					PC With PC Insulation	- Without Filter	TCRH-0-2HW-DC2-DRE15-PC-Z
						A Aluminum	TCRH-0-2HW-DC2-DRE15-PC-A
						N Saran Net	TCRH-0-2HW-DC2-DRE15-PC-N
						S Other	TCRH-0-2HW-DC2-DRE15-PC-S
					PE With PE Insulation	- Without Filter	TCRH-0-2HW-DC2-DRE15-PE-Z
						A Aluminum	TCRH-0-2HW-DC2-DRE15-PE-A
						N Saran Net	TCRH-0-2HW-DC2-DRE15-PE-N
						S Other	TCRH-0-2HW-DC2-DRE15-PE-S

◀103·104

FAN COIL UNIT Lineup Chart

TCRH-2HW-DC3

TYPE	POWER SOURCE	MOTOR	COIL	DRAIN PAN	PLENUM	FILTER	MODEL
Ceiling Recessed, High Static Model TCRH	220V 2	Standard Static (0-150Pa) HW	4-Row Cooling 1-Row Heating DC3	With PC Insulation DRC	- Without Plenum	- Without Filter	TCRH-0-2HW-DC3-DRC -Z -Z
					P Without Insulation	- Without Filter	TCRH-0-2HW-DC3-DRC -P -Z
						A Aluminum	TCRH-0-2HW-DC3-DRC -P -A
						N Saran Net	TCRH-0-2HW-DC3-DRC -P -N
						S Other	TCRH-0-2HW-DC3-DRC -P -S
					PW With GW Insulation	- Without Filter	TCRH-0-2HW-DC3-DRC -PW-Z
						A Aluminum	TCRH-0-2HW-DC3-DRC -PW-A
						N Saran Net	TCRH-0-2HW-DC3-DRC -PW-N
						S Other	TCRH-0-2HW-DC3-DRC -PW-S
					PC With PC Insulation	- Without Filter	TCRH-0-2HW-DC3-DRC -PC-Z
						A Aluminum	TCRH-0-2HW-DC3-DRC -PC-A
						N Saran Net	TCRH-0-2HW-DC3-DRC -PC-N
						S Other	TCRH-0-2HW-DC3-DRC -PC-S
					PE With PE Insulation	- Without Filter	TCRH-0-2HW-DC3-DRC -PE-Z
						A Aluminum	TCRH-0-2HW-DC3-DRC -PE-A
						N Saran Net	TCRH-0-2HW-DC3-DRC -PE-N
						S Other	TCRH-0-2HW-DC3-DRC -PE-S
				With PC Insulation, 150mm Extended DRC15	- Without Plenum	- Without Filter	TCRH-0-2HW-DC3-DRC15-Z -Z
					P Without Insulation	- Without Filter	TCRH-0-2HW-DC3-DRC15-P -Z
						A Aluminum	TCRH-0-2HW-DC3-DRC15-P -A
						N Saran Net	TCRH-0-2HW-DC3-DRC15-P -N
						S Other	TCRH-0-2HW-DC3-DRC15-P -S
					PW With GW Insulation	- Without Filter	TCRH-0-2HW-DC3-DRC15-PW-Z
						A Aluminum	TCRH-0-2HW-DC3-DRC15-PW-A
						N Saran Net	TCRH-0-2HW-DC3-DRC15-PW-N
						S Other	TCRH-0-2HW-DC3-DRC15-PW-S
					PC With PC Insulation	- Without Filter	TCRH-0-2HW-DC3-DRC15-PC-Z
						A Aluminum	TCRH-0-2HW-DC3-DRC15-PC-A
						N Saran Net	TCRH-0-2HW-DC3-DRC15-PC-N
						S Other	TCRH-0-2HW-DC3-DRC15-PC-S
					PE With PE Insulation	- Without Filter	TCRH-0-2HW-DC3-DRC15-PE-Z
						A Aluminum	TCRH-0-2HW-DC3-DRC15-PE-A
						N Saran Net	TCRH-0-2HW-DC3-DRC15-PE-N
						S Other	TCRH-0-2HW-DC3-DRC15-PE-S
				With PE Insulation DRE	- Without Plenum	- Without Filter	TCRH-0-2HW-DC3-DRE -Z -Z
					P Without Insulation	- Without Filter	TCRH-0-2HW-DC3-DRE -P -Z
						A Aluminum	TCRH-0-2HW-DC3-DRE -P -A
						N Saran Net	TCRH-0-2HW-DC3-DRE -P -N
						S Other	TCRH-0-2HW-DC3-DRE -P -S
					PW With GW Insulation	- Without Filter	TCRH-0-2HW-DC3-DRE -PW-Z
						A Aluminum	TCRH-0-2HW-DC3-DRE -PW-A
						N Saran Net	TCRH-0-2HW-DC3-DRE -PW-N
						S Other	TCRH-0-2HW-DC3-DRE -PW-S
					PC With PC Insulation	- Without Filter	TCRH-0-2HW-DC3-DRE -PC-Z
						A Aluminum	TCRH-0-2HW-DC3-DRE -PC-A
						N Saran Net	TCRH-0-2HW-DC3-DRE -PC-N
						S Other	TCRH-0-2HW-DC3-DRE -PC-S
					PE With PE Insulation	- Without Filter	TCRH-0-2HW-DC3-DRE -PE-Z
						A Aluminum	TCRH-0-2HW-DC3-DRE -PE-A
						N Saran Net	TCRH-0-2HW-DC3-DRE -PE-N
						S Other	TCRH-0-2HW-DC3-DRE -PE-S
				With PE Insulation, 150mm Extended DRE15	- Without Plenum	- Without Filter	TCRH-0-2HW-DC3-DRE15-Z -Z
					P Without Insulation	- Without Filter	TCRH-0-2HW-DC3-DRE15-P -Z
						A Aluminum	TCRH-0-2HW-DC3-DRE15-P -A
						N Saran Net	TCRH-0-2HW-DC3-DRE15-P -N
						S Other	TCRH-0-2HW-DC3-DRE15-P -S
					PW With GW Insulation	- Without Filter	TCRH-0-2HW-DC3-DRE15-PW-Z
						A Aluminum	TCRH-0-2HW-DC3-DRE15-PW-A
						N Saran Net	TCRH-0-2HW-DC3-DRE15-PW-N
						S Other	TCRH-0-2HW-DC3-DRE15-PW-S
					PC With PC Insulation	- Without Filter	TCRH-0-2HW-DC3-DRE15-PC-Z
						A Aluminum	TCRH-0-2HW-DC3-DRE15-PC-A
						N Saran Net	TCRH-0-2HW-DC3-DRE15-PC-N
						S Other	TCRH-0-2HW-DC3-DRE15-PC-S
					PE With PE Insulation	- Without Filter	TCRH-0-2HW-DC3-DRE15-PE-Z
						A Aluminum	TCRH-0-2HW-DC3-DRE15-PE-A
						N Saran Net	TCRH-0-2HW-DC3-DRE15-PE-N
						S Other	TCRH-0-2HW-DC3-DRE15-PE-S

FAN COIL UNIT Lineup Chart

TCRH-2HW-DC4

TYPE	POWER SOURCE	MOTOR	COIL	DRAIN PAN	PLENUM	FILTER	MODEL
Ceiling Recessed, High Static Model TCRH	220V 2	Standard Static (0-150Pa) HW	4-Row Cooling 2-Row Heating DC4	With PC Insulation DRC	- Without Plenum	- Without Filter	TCRH-0-2HW-DC4-DRC -Z -Z
					P Without Insulation	- Without Filter	TCRH-0-2HW-DC4-DRC -P -Z
						A Aluminum	TCRH-0-2HW-DC4-DRC -P -A
						N Saran Net	TCRH-0-2HW-DC4-DRC -P -N
						S Other	TCRH-0-2HW-DC4-DRC -P -S
					PW With GW Insulation	- Without Filter	TCRH-0-2HW-DC4-DRC -PW-Z
						A Aluminum	TCRH-0-2HW-DC4-DRC -PW-A
						N Saran Net	TCRH-0-2HW-DC4-DRC -PW-N
						S Other	TCRH-0-2HW-DC4-DRC -PW-S
					PC With PC Insulation	- Without Filter	TCRH-0-2HW-DC4-DRC -PC-Z
						A Aluminum	TCRH-0-2HW-DC4-DRC -PC-A
						N Saran Net	TCRH-0-2HW-DC4-DRC -PC-N
						S Other	TCRH-0-2HW-DC4-DRC -PC-S
					PE With PE Insulation	- Without Filter	TCRH-0-2HW-DC4-DRC -PE-Z
						A Aluminum	TCRH-0-2HW-DC4-DRC -PE-A
						N Saran Net	TCRH-0-2HW-DC4-DRC -PE-N
						S Other	TCRH-0-2HW-DC4-DRC -PE-S
				With PC Insulation, 150mm Extended DRC15	- Without Plenum	- Without Filter	TCRH-0-2HW-DC4-DRC15-Z -Z
					P Without Insulation	- Without Filter	TCRH-0-2HW-DC4-DRC15-P -Z
						A Aluminum	TCRH-0-2HW-DC4-DRC15-P -A
						N Saran Net	TCRH-0-2HW-DC4-DRC15-P -N
						S Other	TCRH-0-2HW-DC4-DRC15-P -S
					PW With GW Insulation	- Without Filter	TCRH-0-2HW-DC4-DRC15-PW-Z
						A Aluminum	TCRH-0-2HW-DC4-DRC15-PW-A
						N Saran Net	TCRH-0-2HW-DC4-DRC15-PW-N
						S Other	TCRH-0-2HW-DC4-DRC15-PW-S
					PC With PC Insulation	- Without Filter	TCRH-0-2HW-DC4-DRC15-PC-Z
						A Aluminum	TCRH-0-2HW-DC4-DRC15-PC-A
						N Saran Net	TCRH-0-2HW-DC4-DRC15-PC-N
						S Other	TCRH-0-2HW-DC4-DRC15-PC-S
					PE With PE Insulation	- Without Filter	TCRH-0-2HW-DC4-DRC15-PE-Z
						A Aluminum	TCRH-0-2HW-DC4-DRC15-PE-A
						N Saran Net	TCRH-0-2HW-DC4-DRC15-PE-N
						S Other	TCRH-0-2HW-DC4-DRC15-PE-S
				With PE Insulation DRE	- Without Plenum	- Without Filter	TCRH-0-2HW-DC4-DRE -Z -Z
					P Without Insulation	- Without Filter	TCRH-0-2HW-DC4-DRE -P -Z
						A Aluminum	TCRH-0-2HW-DC4-DRE -P -A
						N Saran Net	TCRH-0-2HW-DC4-DRE -P -N
						S Other	TCRH-0-2HW-DC4-DRE -P -S
					PW With GW Insulation	- Without Filter	TCRH-0-2HW-DC4-DRE -PW-Z
						A Aluminum	TCRH-0-2HW-DC4-DRE -PW-A
						N Saran Net	TCRH-0-2HW-DC4-DRE -PW-N
						S Other	TCRH-0-2HW-DC4-DRE -PW-S
					PC With PC Insulation	- Without Filter	TCRH-0-2HW-DC4-DRE -PC-Z
						A Aluminum	TCRH-0-2HW-DC4-DRE -PC-A
						N Saran Net	TCRH-0-2HW-DC4-DRE -PC-N
						S Other	TCRH-0-2HW-DC4-DRE -PC-S
					PE With PE Insulation	- Without Filter	TCRH-0-2HW-DC4-DRE -PE-Z
						A Aluminum	TCRH-0-2HW-DC4-DRE -PE-A
						N Saran Net	TCRH-0-2HW-DC4-DRE -PE-N
						S Other	TCRH-0-2HW-DC4-DRE -PE-S
				With PE Insulation, 150mm Extended DRE15	- Without Plenum	- Without Filter	TCRH-0-2HW-DC4-DRE15-Z -Z
					P Without Insulation	- Without Filter	TCRH-0-2HW-DC4-DRE15-P -Z
						A Aluminum	TCRH-0-2HW-DC4-DRE15-P -A
						N Saran Net	TCRH-0-2HW-DC4-DRE15-P -N
						S Other	TCRH-0-2HW-DC4-DRE15-P -S
					PW With GW Insulation	- Without Filter	TCRH-0-2HW-DC4-DRE15-PW-Z
						A Aluminum	TCRH-0-2HW-DC4-DRE15-PW-A
						N Saran Net	TCRH-0-2HW-DC4-DRE15-PW-N
						S Other	TCRH-0-2HW-DC4-DRE15-PW-S
					PC With PC Insulation	- Without Filter	TCRH-0-2HW-DC4-DRE15-PC-Z
						A Aluminum	TCRH-0-2HW-DC4-DRE15-PC-A
						N Saran Net	TCRH-0-2HW-DC4-DRE15-PC-N
						S Other	TCRH-0-2HW-DC4-DRE15-PC-S
					PE With PE Insulation	- Without Filter	TCRH-0-2HW-DC4-DRE15-PE-Z
						A Aluminum	TCRH-0-2HW-DC4-DRE15-PE-A
						N Saran Net	TCRH-0-2HW-DC4-DRE15-PE-N
						S Other	TCRH-0-2HW-DC4-DRE15-PE-S

105·106

FAN COIL UNIT Lineup Chart

TCRH-2HW-HT

TYPE	POWER SOURCE	MOTOR	COIL	DRAIN PAN	PLENUM	FILTER	MODEL
Ceiling Recessed, High Static Model TCRH	220V 2	Standard Static (0-150Pa) HW	6-Row, High Temperature Rise HT	With PC Insulation DRC	- Without Plenum	- Without Filter	TCRH-0-2HW-HT-DRC -Z -Z
					P Without Insulation	- Without Filter	TCRH-0-2HW-HT-DRC -P -Z
						A Aluminum	TCRH-0-2HW-HT-DRC -P -A
						N Saran Net	TCRH-0-2HW-HT-DRC -P -N
						S Other	TCRH-0-2HW-HT-DRC -P -S
					PW With GW Insulation	- Without Filter	TCRH-0-2HW-HT-DRC -PW-Z
						A Aluminum	TCRH-0-2HW-HT-DRC -PW-A
						N Saran Net	TCRH-0-2HW-HT-DRC -PW-N
						S Other	TCRH-0-2HW-HT-DRC -PW-S
					PC With PC Insulation	- Without Filter	TCRH-0-2HW-HT-DRC -PC-Z
						A Aluminum	TCRH-0-2HW-HT-DRC -PC-A
						N Saran Net	TCRH-0-2HW-HT-DRC -PC-N
						S Other	TCRH-0-2HW-HT-DRC -PC-S
					PE With PE Insulation	- Without Filter	TCRH-0-2HW-HT-DRC -PE-Z
						A Aluminum	TCRH-0-2HW-HT-DRC -PE-A
						N Saran Net	TCRH-0-2HW-HT-DRC -PE-N
						S Other	TCRH-0-2HW-HT-DRC -PE-S
				With PC Insulation, 150mm Extended DRC15	- Without Plenum	- Without Filter	TCRH-0-2HW-HT-DRC15-Z -Z
					P Without Insulation	- Without Filter	TCRH-0-2HW-HT-DRC15-P -Z
						A Aluminum	TCRH-0-2HW-HT-DRC15-P -A
						N Saran Net	TCRH-0-2HW-HT-DRC15-P -N
						S Other	TCRH-0-2HW-HT-DRC15-P -S
					PW With GW Insulation	- Without Filter	TCRH-0-2HW-HT-DRC15-PW-Z
						A Aluminum	TCRH-0-2HW-HT-DRC15-PW-A
						N Saran Net	TCRH-0-2HW-HT-DRC15-PW-N
						S Other	TCRH-0-2HW-HT-DRC15-PW-S
					PC With PC Insulation	- Without Filter	TCRH-0-2HW-HT-DRC15-PC-Z
						A Aluminum	TCRH-0-2HW-HT-DRC15-PC-A
						N Saran Net	TCRH-0-2HW-HT-DRC15-PC-N
						S Other	TCRH-0-2HW-HT-DRC15-PC-S
					PE With PE Insulation	- Without Filter	TCRH-0-2HW-HT-DRC15-PE-Z
						A Aluminum	TCRH-0-2HW-HT-DRC15-PE-A
						N Saran Net	TCRH-0-2HW-HT-DRC15-PE-N
						S Other	TCRH-0-2HW-HT-DRC15-PE-S
				With PE Insulation DRE	- Without Plenum	- Without Filter	TCRH-0-2HW-HT-DRE -Z -Z
					P Without Insulation	- Without Filter	TCRH-0-2HW-HT-DRE -P -Z
						A Aluminum	TCRH-0-2HW-HT-DRE -P -A
						N Saran Net	TCRH-0-2HW-HT-DRE -P -N
						S Other	TCRH-0-2HW-HT-DRE -P -S
					PW With GW Insulation	- Without Filter	TCRH-0-2HW-HT-DRE -PW-Z
						A Aluminum	TCRH-0-2HW-HT-DRE -PW-A
						N Saran Net	TCRH-0-2HW-HT-DRE -PW-N
						S Other	TCRH-0-2HW-HT-DRE -PW-S
					PC With PC Insulation	- Without Filter	TCRH-0-2HW-HT-DRE -PC-Z
						A Aluminum	TCRH-0-2HW-HT-DRE -PC-A
						N Saran Net	TCRH-0-2HW-HT-DRE -PC-N
						S Other	TCRH-0-2HW-HT-DRE -PC-S
					PE With PE Insulation	- Without Filter	TCRH-0-2HW-HT-DRE -PE-Z
						A Aluminum	TCRH-0-2HW-HT-DRE -PE-A
						N Saran Net	TCRH-0-2HW-HT-DRE -PE-N
						S Other	TCRH-0-2HW-HT-DRE -PE-S
				With PE Insulation, 150mm Extended DRE15	- Without Plenum	- Without Filter	TCRH-0-2HW-HT-DRE15-Z -Z
					P Without Insulation	- Without Filter	TCRH-0-2HW-HT-DRE15-P -Z
						A Aluminum	TCRH-0-2HW-HT-DRE15-P -A
						N Saran Net	TCRH-0-2HW-HT-DRE15-P -N
						S Other	TCRH-0-2HW-HT-DRE15-P -S
					PW With GW Insulation	- Without Filter	TCRH-0-2HW-HT-DRE15-PW-Z
						A Aluminum	TCRH-0-2HW-HT-DRE15-PW-A
						N Saran Net	TCRH-0-2HW-HT-DRE15-PW-N
						S Other	TCRH-0-2HW-HT-DRE15-PW-S
					PC With PC Insulation	- Without Filter	TCRH-0-2HW-HT-DRE15-PC-Z
						A Aluminum	TCRH-0-2HW-HT-DRE15-PC-A
						N Saran Net	TCRH-0-2HW-HT-DRE15-PC-N
						S Other	TCRH-0-2HW-HT-DRE15-PC-S
					PE With PE Insulation	- Without Filter	TCRH-0-2HW-HT-DRE15-PE-Z
						A Aluminum	TCRH-0-2HW-HT-DRE15-PE-A
						N Saran Net	TCRH-0-2HW-HT-DRE15-PE-N
						S Other	TCRH-0-2HW-HT-DRE15-PE-S

FAN COIL UNIT Lineup Chart

TC-2SW/2HW

TYPE	POWER SOURCE	MOTOR	COIL	DRAIN PAN	PLENUM	FILTER	MODEL
Ceiling Mount Exposed Model TC	220V 2	Free Discharge SW	3-Row Cooling/Heating 3R	DRC With PC Insulation	-	A Aluminum	TC-0-2SW-3R -DRC-A
						N Saran Net	TC-0-2SW-3R -DRC-N
						S Other	TC-0-2SW-3R -DRC-S
				DRE With PE Insulation	-	A Aluminum	TC-0-2SW-3R -DRE-A
						N Saran Net	TC-0-2SW-3R -DRE-N
						S Other	TC-0-2SW-3R -DRE-S
			4-Row Cooling/Heating 4R	DRC With PC Insulation	-	A Aluminum	TC-0-2SW-4R -DRC-A
						N Saran Net	TC-0-2SW-4R -DRC-N
						S Other	TC-0-2SW-4R -DRC-S
				DRE With PE Insulation	-	A Aluminum	TC-0-2SW-4R -DRE-A
						N Saran Net	TC-0-2SW-4R -DRE-N
						S Other	TC-0-2SW-4R -DRE-S
			2-Row Cooling, 1-Row Heating DC1	DRC With PC Insulation	-	A Aluminum	TC-0-2SW-DC1-DRC-A
						N Saran Net	TC-0-2SW-DC1-DRC-N
						S Other	TC-0-2SW-DC1-DRC-S
				DRE With PE Insulation	-	A Aluminum	TC-0-2SW-DC1-DRE-A
						N Saran Net	TC-0-2SW-DC1-DRE-N
						S Other	TC-0-2SW-DC1-DRE-S
			3-Row Cooling, 1-Row Heating DC2	DRC With PC Insulation	-	A Aluminum	TC-0-2SW-DC2-DRC-A
						N Saran Net	TC-0-2SW-DC2-DRC-N
						S Other	TC-0-2SW-DC2-DRC-S
				DRE With PE Insulation	-	A Aluminum	TC-0-2SW-DC2-DRE-A
						N Saran Net	TC-0-2SW-DC2-DRE-N
						S Other	TC-0-2SW-DC2-DRE-S
			4-Row, High Temperature Rise HT	DRC With PC Insulation	-	A Aluminum	TC-0-2SW-HT -DRC-A
						N Saran Net	TC-0-2SW-HT -DRC-N
						S Other	TC-0-2SW-HT -DRC-S
				DRE With PE Insulation	-	A Aluminum	TC-0-2SW-HT -DRE-A
						N Saran Net	TC-0-2SW-HT -DRE-N
						S Other	TC-0-2SW-HT -DRE-S
		Free Discharge HW	3-Row Cooling/Heating 3R	DRC With PC Insulation	-	A Aluminum	TC-0-2HW-3R -DRC-A
						N Saran Net	TC-0-2HW-3R -DRC-N
						S Other	TC-0-2HW-3R -DRC-S
				DRE With PE Insulation	-	A Aluminum	TC-0-2HW-3R -DRE-A
						N Saran Net	TC-0-2HW-3R -DRE-N
						S Other	TC-0-2HW-3R -DRE-S
			4-Row Cooling/Heating 4R	DRC With PC Insulation	-	A Aluminum	TC-0-2HW-4R -DRC-A
						N Saran Net	TC-0-2HW-4R -DRC-N
						S Other	TC-0-2HW-4R -DRC-S
				DRE With PE Insulation	-	A Aluminum	TC-0-2HW-4R -DRE-A
						N Saran Net	TC-0-2HW-4R -DRE-N
						S Other	TC-0-2HW-4R -DRE-S
			2-Row Cooling, 1-Row Heating DC1	DRC With PC Insulation	-	A Aluminum	TC-0-2HW-DC1-DRC-A
						N Saran Net	TC-0-2HW-DC1-DRC-N
						S Other	TC-0-2HW-DC1-DRC-S
				DRE With PE Insulation	-	A Aluminum	TC-0-2HW-DC1-DRE-A
						N Saran Net	TC-0-2HW-DC1-DRE-N
						S Other	TC-0-2HW-DC1-DRE-S
			3-Row Cooling, 1-Row Heating DC2	DRC With PC Insulation	-	A Aluminum	TC-0-2HW-DC2-DRC-A
						N Saran Net	TC-0-2HW-DC2-DRC-N
						S Other	TC-0-2HW-DC2-DRC-S
				DRE With PE Insulation	-	A Aluminum	TC-0-2HW-DC2-DRE-A
						N Saran Net	TC-0-2HW-DC2-DRE-N
						S Other	TC-0-2HW-DC2-DRE-S
			4-Row, High Temperature Rise HT	DRC With PC Insulation	-	A Aluminum	TC-0-2HW-HT -DRC-A
						N Saran Net	TC-0-2HW-HT -DRC-N
						S Other	TC-0-2HW-HT -DRC-S
				DRE With PE Insulation	-	A Aluminum	TC-0-2HW-HT -DRE-A
						N Saran Net	TC-0-2HW-HT -DRE-N
						S Other	TC-0-2HW-HT -DRE-S

◀ 107
108

FAN COIL UNIT Lineup Chart

TF-2SW/2HW

TYPE	POWER SOURCE	MOTOR	COIL	DRAIN PAN	PLENUM	FILTER	MODEL
Floor Mount Exposed Model TF	220V 2	Free Discharge SW	3-Row Cooling/Heating 3R	DRC With PC Insulation	-	A Aluminum	TF-0-2SW-3R -DRC-A
						N Saran Net	TF-0-2SW-3R -DRC-N
						S Other	TF-0-2SW-3R -DRC-S
				DRE With PE Insulation	-	A Aluminum	TF-0-2SW-3R -DRE-A
						N Saran Net	TF-0-2SW-3R -DRE-N
						S Other	TF-0-2SW-3R -DRE-S
			4-Row Cooling/Heating 4R	DRC With PC Insulation	-	A Aluminum	TF-0-2SW-4R -DRC-A
						N Saran Net	TF-0-2SW-4R -DRC-N
						S Other	TF-0-2SW-4R -DRC-S
				DRE With PE Insulation	-	A Aluminum	TF-0-2SW-4R -DRE-A
						N Saran Net	TF-0-2SW-4R -DRE-N
						S Other	TF-0-2SW-4R -DRE-S
			2-Row Cooling, 1-Row Heating DC1	DRC With PC Insulation	-	A Aluminum	TF-0-2SW-DC1-DRC-A
						N Saran Net	TF-0-2SW-DC1-DRC-N
						S Other	TF-0-2SW-DC1-DRC-S
				DRE With PE Insulation	-	A Aluminum	TF-0-2SW-DC1-DRE-A
						N Saran Net	TF-0-2SW-DC1-DRE-N
						S Other	TF-0-2SW-DC1-DRE-S
			3-Row Cooling, 1-Row Heating DC2	DRC With PC Insulation	-	A Aluminum	TF-0-2SW-DC2-DRC-A
						N Saran Net	TF-0-2SW-DC2-DRC-N
						S Other	TF-0-2SW-DC2-DRC-S
				DRE With PE Insulation	-	A Aluminum	TF-0-2SW-DC2-DRE-A
						N Saran Net	TF-0-2SW-DC2-DRE-N
						S Other	TF-0-2SW-DC2-DRE-S
			4-Row, High Temperature Rise HT	DRC With PC Insulation	-	A Aluminum	TF-0-2SW-HT -DRC-A
						N Saran Net	TF-0-2SW-HT -DRC-N
						S Other	TF-0-2SW-HT -DRC-S
				DRE With PE Insulation	-	A Aluminum	TF-0-2SW-HT -DRE-A
						N Saran Net	TF-0-2SW-HT -DRE-N
						S Other	TF-0-2SW-HT -DRE-S
		Free Discharge HW	3-Row Cooling/Heating 3R	DRC With PC Insulation	-	A Aluminum	TF-0-2HW-3R -DRC-A
						N Saran Net	TF-0-2HW-3R -DRC-N
						S Other	TF-0-2HW-3R -DRC-S
				DRE With PE Insulation	-	A Aluminum	TF-0-2HW-3R -DRE-A
						N Saran Net	TF-0-2HW-3R -DRE-N
						S Other	TF-0-2HW-3R -DRE-S
			4-Row Cooling/Heating 4R	DRC With PC Insulation	-	A Aluminum	TF-0-2HW-4R -DRC-A
						N Saran Net	TF-0-2HW-4R -DRC-N
						S Other	TF-0-2HW-4R -DRC-S
				DRE With PE Insulation	-	A Aluminum	TF-0-2HW-4R -DRE-A
						N Saran Net	TF-0-2HW-4R -DRE-N
						S Other	TF-0-2HW-4R -DRE-S
			2-Row Cooling, 1-Row Heating DC1	DRC With PC Insulation	-	A Aluminum	TF-0-2HW-DC1-DRC-A
						N Saran Net	TF-0-2HW-DC1-DRC-N
						S Other	TF-0-2HW-DC1-DRC-S
				DRE With PE Insulation	-	A Aluminum	TF-0-2HW-DC1-DRE-A
						N Saran Net	TF-0-2HW-DC1-DRE-N
						S Other	TF-0-2HW-DC1-DRE-S
			3-Row Cooling, 1-Row Heating DC2	DRC With PC Insulation	-	A Aluminum	TF-0-2HW-DC2-DRC-A
						N Saran Net	TF-0-2HW-DC2-DRC-N
						S Other	TF-0-2HW-DC2-DRC-S
				DRE With PE Insulation	-	A Aluminum	TF-0-2HW-DC2-DRE-A
						N Saran Net	TF-0-2HW-DC2-DRE-N
						S Other	TF-0-2HW-DC2-DRE-S
			4-Row, High Temperature Rise HT	DRC With PC Insulation	-	A Aluminum	TF-0-2HW-HT -DRC-A
						N Saran Net	TF-0-2HW-HT -DRC-N
						S Other	TF-0-2HW-HT -DRC-S
				DRE With PE Insulation	-	A Aluminum	TF-0-2HW-HT -DRE-A
						N Saran Net	TF-0-2HW-HT -DRE-N
						S Other	TF-0-2HW-HT -DRE-S

FAN COIL UNIT Lineup Chart

TFR-2SW/2HW

TYPE	POWER SOURCE	MOTOR	COIL	DRAIN PAN	PLENUM	FILTER	MODEL
Floor Mount Recessed Model **TFR**	220V **2**	Standard Static (0-30Pa) **SW**	3-Row Cooling/Heating **3R**	**DRC** With PC Insulation	-	A Aluminum	TFR-0-2SW-3R -DRC-A
						N Saran Net	TFR-0-2SW-3R -DRC-N
						S Other	TFR-0-2SW-3R -DRC-S
				DRE With PE Insulation	-	A Aluminum	TFR-0-2SW-3R -DRE-A
						N Saran Net	TFR-0-2SW-3R -DRE-N
						S Other	TFR-0-2SW-3R -DRE-S
			4-Row Cooling/Heating **4R**	**DRC** With PC Insulation	-	A Aluminum	TFR-0-2SW-4R -DRC-A
						N Saran Net	TFR-0-2SW-4R -DRC-N
						S Other	TFR-0-2SW-4R -DRC-S
				DRE With PE Insulation	-	A Aluminum	TFR-0-2SW-4R -DRE-A
						N Saran Net	TFR-0-2SW-4R -DRE-N
						S Other	TFR-0-2SW-4R -DRE-S
			2-Row Cooling, 1-Row Heating **DC1**	**DRC** With PC Insulation	-	A Aluminum	TFR-0-2SW-DC1-DRC-A
						N Saran Net	TFR-0-2SW-DC1-DRC-N
						S Other	TFR-0-2SW-DC1-DRC-S
				DRE With PE Insulation	-	A Aluminum	TFR-0-2SW-DC1-DRE-A
						N Saran Net	TFR-0-2SW-DC1-DRE-N
						S Other	TFR-0-2SW-DC1-DRE-S
			3-Row Cooling, 1-Row Heating **DC2**	**DRC** With PC Insulation	-	A Aluminum	TFR-0-2SW-DC2-DRC-A
						N Saran Net	TFR-0-2SW-DC2-DRC-N
						S Other	TFR-0-2SW-DC2-DRC-S
				DRE With PE Insulation	-	A Aluminum	TFR-0-2SW-DC2-DRE-A
						N Saran Net	TFR-0-2SW-DC2-DRE-N
						S Other	TFR-0-2SW-DC2-DRE-S
			4-Row, High Temperature Rise **HT**	**DRC** With PC Insulation	-	A Aluminum	TFR-0-2SW-HT -DRC-A
						N Saran Net	TFR-0-2SW-HT -DRC-N
						S Other	TFR-0-2SW-HT -DRC-S
				DRE With PE Insulation	-	A Aluminum	TFR-0-2SW-HT -DRE-A
						N Saran Net	TFR-0-2SW-HT -DRE-N
						S Other	TFR-0-2SW-HT -DRE-S
		High Static (0-50Pa) **HW**	3-Row Cooling/Heating **3R**	**DRC** With PC Insulation	-	A Aluminum	TFR-0-2HW-3R -DRC-A
						N Saran Net	TFR-0-2HW-3R -DRC-N
						S Other	TFR-0-2HW-3R -DRC-S
				DRE With PE Insulation	-	A Aluminum	TFR-0-2HW-3R -DRE-A
						N Saran Net	TFR-0-2HW-3R -DRE-N
						S Other	TFR-0-2HW-3R -DRE-S
			4-Row Cooling/Heating **4R**	**DRC** With PC Insulation	-	A Aluminum	TFR-0-2HW-4R -DRC-A
						N Saran Net	TFR-0-2HW-4R -DRC-N
						S Other	TFR-0-2HW-4R -DRC-S
				DRE With PE Insulation	-	A Aluminum	TFR-0-2HW-4R -DRE-A
						N Saran Net	TFR-0-2HW-4R -DRE-N
						S Other	TFR-0-2HW-4R -DRE-S
			2-Row Cooling, 1-Row Heating **DC1**	**DRC** With PC Insulation	-	A Aluminum	TFR-0-2HW-DC1-DRC-A
						N Saran Net	TFR-0-2HW-DC1-DRC-N
						S Other	TFR-0-2HW-DC1-DRC-S
				DRE With PE Insulation	-	A Aluminum	TFR-0-2HW-DC1-DRE-A
						N Saran Net	TFR-0-2HW-DC1-DRE-N
						S Other	TFR-0-2HW-DC1-DRE-S
			3-Row Cooling, 1-Row Heating **DC2**	**DRC** With PC Insulation	-	A Aluminum	TFR-0-2HW-DC2-DRC-A
						N Saran Net	TFR-0-2HW-DC2-DRC-N
						S Other	TFR-0-2HW-DC2-DRC-S
				DRE With PE Insulation	-	A Aluminum	TFR-0-2HW-DC2-DRE-A
						N Saran Net	TFR-0-2HW-DC2-DRE-N
						S Other	TFR-0-2HW-DC2-DRE-S
			4-Row, High Temperature Rise **HT**	**DRC** With PC Insulation	-	A Aluminum	TFR-0-2HW-HT -DRC-A
						N Saran Net	TFR-0-2HW-HT -DRC-N
						S Other	TFR-0-2HW-HT -DRC-S
				DRE With PE Insulation	-	A Aluminum	TFR-0-2HW-HT -DRE-A
						N Saran Net	TFR-0-2HW-HT -DRE-N
						S Other	TFR-0-2HW-HT -DRE-S

◀ 109
110

Conversion of Units used in this Catalog		
	Unit used in catalog	Conversion
Air Volume	l/s	1 l/s = 2.12 CFM
Cooling/Heating Capacity	kW	1 kW = 3413BTUH
Water Flow	l/s	1 l/s = 15.85 GPM
Water Pressure Drop	kPa	1 kPa = 0.3345 ftWG
External Static Pressure	Pa	1 Pa = 0.004 inWG
Air/Water Temperature	°C	°F = (9 / 5) ×°C + 32

SINKO INDUSTRIES LTD.

2-57-7,NIHONBASHI-HAMACHO
CHUO-KU,TOKYO 103-0007 JAPAN

TEL:(81-3)5640-4167 FAX:(81-3)5640-4306

www.global-sinko.com
Mail:intnl@sinko.co.jp

The company is always improving and developing its products,
therefore the company reserves the right to make changes to the illustrated products.

FSC www.fsc.org ミックス 責任ある木質資源を使用した紙 FSC® C020561

VEGETABLE OIL INK

All rights reserved. 2013

FCU-20-A(220V) 2000 D