## Ceiling Recessed Model-High Static Model
## 2-Row Cooling,1-Row Heating

# SRC-2HW-DC1-DRC -Z/P/PW/PC

# SRC-2HW-DC1-DRE -Z/P/PW/PE

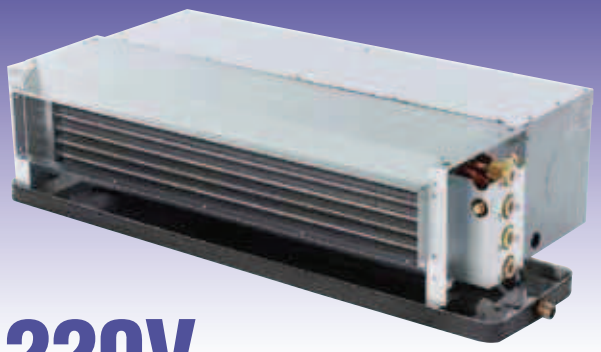

# 220V

## Specification

| Unit Size | | 300 | 400 | 600 | 800 | 1000 | 1200 | 1400 |
|---|---|---|---|---|---|---|---|---|
| Air Volume l/s | H | 154 | 226 | 283 | 340 | 460 | 552 | 655 |
| | M | 135 | 183 | 259 | 285 | 410 | 506 | 570 |
| | L | 104 | 144 | 213 | 210 | 336 | 418 | 432 |
| Cooling Capacity KW | SH | 1.2 | 2.0 | 2.6 | 3.3 | 3.9 | 4.9 | 5.7 |
| | TH | 1.4 | 2.5 | 3.2 | 4.3 | 4.7 | 6.0 | 7.1 |
| Heating Capacity KW | | 3.6 | 5.6 | 6.9 | 8.8 | 11.1 | 13.4 | 15.8 |
| Water Flow l/s | | 0.07 | 0.12 | 0.16 | 0.21 | 0.23 | 0.29 | 0.35 |
| W.P.D. kPa | | 3 | 11 | 20 | 41 | 9 | 15 | 23 |
| Input Power W | | 68 | 94 | 119 | 155 | 204 | 234 | 283 |
| Running Current A | | 0.31 | 0.43 | 0.55 | 0.71 | 0.94 | 1.07 | 1.30 |
| Noise dB(A) | H | 48.5 | 46.5 | 48.5 | 50.5 | 52.0 | 51.0 | 54.5 |
| | M | 45.0 | 41.0 | 46.5 | 46.5 | 49.0 | 49.0 | 51.0 |
| | L | 38.5 | 35.5 | 42.5 | 39.5 | 44.5 | 44.5 | 44.0 |
| Weight kg (without plenum) | | 19 | 22 | 24 | 28 | 36 | 42 | 45 |
| Weight kg (with plenum) | | 23 | 27 | 30 | 35 | 44 | 55 | 60 |
| Holding Water Volume L | | 0.8 | 1.1 | 1.3 | 1.7 | 2.0 | 2.4 | 2.7 |
| Casing | | Galvanized Steel | | | | | | |
| Fan | | Galvanized sheet fabricated, Forward-Curved DIDW Fan | | | | | | |
| Motor | | 3-Speed, PSC with Capacitor Cap and Flexible Conduit | | | | | | |
| Power Source | | AC220V, 50Hz, Single Phase | | | | | | |
| Coil | | Slit Surfaced, Aluminum Finned Coil complete with Female Sockets at Inlet/Outlet Conn. And Air Vent | | | | | | |
| Operating Pressure | | Max 1700kPa (250psig) unless otherwise specified | | | | | | |
| Drain Pan | | Stainless Steel, SUS430 | | | | | | |

Note:
1. Cooling capacity is based on DB24°C, WB17.8°C, EWT7°C, LWT12°C.
2. Heating capacity is based on DB20°C, EWT60, same water flow as cooling.
3. Cooling/Heating Capacity, Input Power, Running Current are based on H speed.
4. Noise is measured at an anechoic chamber, 1m from the unit surface.
5. Running current may change according to the conditions.
6. Air volume is based on ESP 50Pa. without plenum and filter.

## Dimensions

**Without Plenum** SRC-2HW-DC1-DRC-Z SRC-2HW-DC1-DRE-Z SRC-2HW-DC1-DRC15-Z SRC-2HW-DC1-DRE15-Z SRC-2HW-DC1-DRC24-Z SRC-2HW-DC1-DRE24-Z

**With Plenum** SRC-2HW-DC1-DRC-P/PW/PC SRC-2HW-DC1-DRE-P/PW/PC SRC-2HW-DC1-DRC15-P/PW/PC SRC-2HW-DC1-DRE15-P/PW/PC SRC-2HW-DC1-DRC24-P/PW/PC SRC-2HW-DC1-DRE24-P/PW/PC

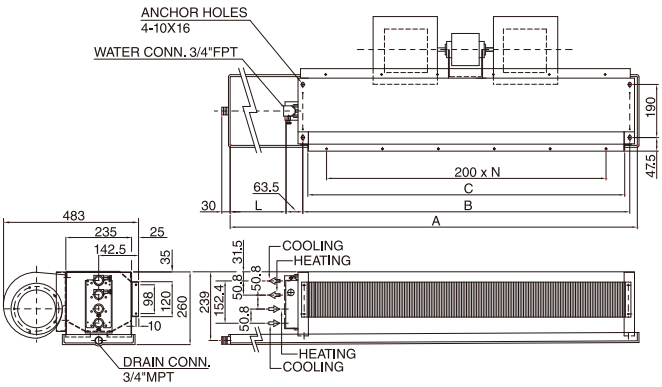


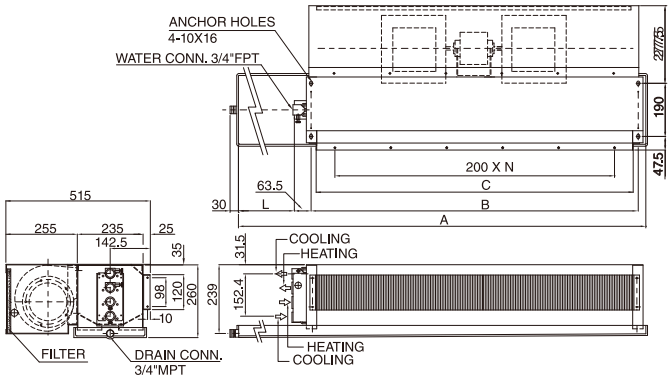


| Unit Size | -Z/P/PW/PE/PC | | 15-Z/P/PW/PE/PC | | 24-Z/P/PW/PE/PC | | B | C | N | NO. OF FAN | NO. OF MOTOR |
|---|---|---|---|---|---|---|---|---|---|---|---|
| | A | L | A | L | A | L | | | | | |
| SRC- 300-2HW-DC1-DRC(E) | 635 | 50 | 785 | 200 | 875 | 290 | 500 | 462 | 2 | 1 | 1 |
| SRC- 400-2HW-DC1-DRC(E) | 885 | 50 | 1035 | 200 | 1125 | 290 | 750 | 712 | 3 | 2 | 1 |
| SRC- 600-2HW-DC1-DRC(E) | 1020 | 50 | 1170 | 200 | 1260 | 290 | 885 | 847 | 4 | 2 | 1 |
| SRC- 800-2HW-DC1-DRC(E) | 1305 | 50 | 1455 | 200 | 1545 | 290 | 1170 | 1132 | 5 | 2 | 1 |
| SRC-1000-2HW-DC1-DRC(E) | 1490 | 50 | 1640 | 200 | 1730 | 290 | 1340 | 1302 | 6 | 3 | 2 |
| SRC-1200-2HW-DC1-DRC(E) | 1740 | 50 | 1890 | 200 | 1980 | 290 | 1590 | 1552 | 7 | 4 | 2 |
| SRC-1400-2HW-DC1-DRC(E) | 1920 | 50 | 2070 | 200 | 2160 | 290 | 1770 | 1732 | 8 | 4 | 2 |

Note:
1. Left hand unit is shown.
2. Furnish access door to service fan motor.
3. Wiring works between motor and switch, and unit to power source by contractors.
4. Unit shall be mounted horizontally.
5. To prevent condensation, fan interlock valve shall be furnished so that water supply will be stopped when fan is off.